1251 64

MOL.20080313.0081

QA:NA

A Facsimile Report

Reproduced by
UNITED STATES
ATOMIC ENERGY COMMISSION
Technical Information Center
P.O. Box 62 Oak Ridge, Tennessee 37830

BEST AVAILABLE COPY

90029 0105

1 OF 2

WASH

1238

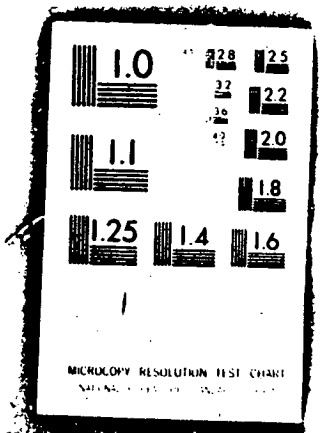

90029 0106

"BEST AVAILABLE COPY"

9002962010 7

ENVIRONMENTAL SURVEY

OF TRANSPORTATION OF RADIOACTIVE MATERIALS

TO AND FROM NUCLEAR POWER PLANTS

(A general analysis of the impact on the environment of transporting radioactive materials to and from a light-water nuclear reactor in accordance with the regulatory standards and requirements of the Atomic Energy Commission and the Department of Transportation.)

Prepared by the

Directorate of Regulatory Standards

U. S. Atomic Energy Commission

December 1972

NOTICE

This report was prepared as an account of work sponsored by the United States Government. Neither the United States nor the United States Atomic Energy Commission, nor any of their employees, nor any of their contractors, subcontractors, or their employees, makes any warranty, express or implied, or assumes any legal liability or responsibility for the accuracy, completeness or usefulness of any information, apparatus, product or process disclosed, or represents that its use would not infringe privately owned rights.

TABLE OF CONTENTS

Page

SUMMARY AND CONCLUSIONS 1

I. INTRODUCTION 3

A. Scope 3
B. Purpose 3
C. Principles of Safety in Transport 4

II. SUMMARY OF RESULTS OF DETAILED ANALYSES 5

A. Bases for Analyses 5
B. Heat 5
C. Weight and Traffic Density 7
D. Radiation Exposures Under Normal Conditions 7
E. Radiation Risk from Accidents 9
F. Risk from Common Causes 10
G. Alternatives 10

III. REGULATORY STANDARDS AND REQUIREMENTS 10

A. Packaging Standards and Requirements 10
B. Nuclear Criticality Safety 14
C. Packaging Design Review 15
D. Quality Assurance and Control 16
E. Radiation Level Limitations 16
F. Surface Contamination Levels 18
G. External Temperature 18
H. Warning Labels 18
I. Placards 19
J. Capacity for Coping with Accidental Releases 19
K. Shipper's Certification 20
L. Weight and Traffic Density 20
M. Changing the Standards and Requirements 21

IV. DETAILED ANALYSIS OF THE ENVIRONMENTAL IMPACT OF TRANSPORTING UNIRRADIATED FUEL TO A TYPICAL LIGHT-WATER NUCLEAR REACTOR IN ACCORDANCE WITH PRESENT REGULATORY STANDARDS AND REQUIREMENTS .. 22

A. Characteristics 22
B. Packaging 22
C. Transport Conditions 23
D. Effects on the Environment 27

"BEST AVAILABLE COPY"

TABLE OF CONTENTS (Cont'd)

Page

Normal Conditions 27
1. Heat 27
2. Weight and Traffic Density 27
3. Radiation 27
Accident Conditions 27
1. In-Plant Accidents 27
2. Off-Site Accidents 30

V. DETAILED ANALYSIS OF THE ENVIRONMENTAL IMPACT OF TRANSPORTING IRRADIATED FUEL FROM A TYPICAL LIGHT-WATER NUCLEAR REACTOR IN ACCORDANCE WITH PRESENT REGULATORY STANDARDS AND REQUIREMENTS .. 32

A. Characteristics 32
B. Packaging 32
C. Transport Conditions 34
D. Effects on the Environment 38
Normal Conditions 38
1. Heat 38
2. Weight and Traffic Density 39
3. Radiation 40
Accident Conditions 43
1. In-Plant Accidents 43
2. Off-Site Accidents 44

VI. DETAILED ANALYSIS OF THE ENVIRONMENTAL IMPACT OF TRANSPORTING SOLID RADIOACTIVE WASTE FROM A TYPICAL LIGHT-WATER NUCLEAR IN ACCORDANCE WITH PRESENT REGULATORY STANDARDS AND REQUIREMENTS . 49

A. Characteristics 49
B. Packaging 50
C. Transport Conditions 50
D. Effects on the Environment 50
Normal Conditions 50
1. Heat 50
2. Weight and Traffic Density 50
3. Radiation 51
Accident Conditions 53
1. In-Plant Accidents 53
2. Off-Site Accidents 53

TABLE OF CONTENTS (Cont'd)

Page

VII. POSSIBLE ALTERNATIVES AND ADDITIONS TO THE TRANSPORTATION METHODS ANALYZED AND COST-BENEFIT ANALYSIS 56

A. Routing 56
B. Escorts 58
C. Longer Storage of Spent Fuel 58
D. Lower Radiation Levels Outside of Packages 59
E. More Stringent Accident Damage Test Criteria 59
F. Nuclear Parks 60

Appendix A - Analysis of Transportation Accidents 61

Appendix B - Section I: Consequences of Transportation Accidents Involving Shipments of Nuclear Fuel or Solid Radioactive Waste 75

- Section II: Population Dose Distribution Probabilities ... 94

Appendix C - Risks in Transportation Accidents from Common (Non-Radiological) Causes 105

Appendix D - Calculations of the Dose to People Along the Shipping Route Under Normal Transport Conditions 107

REFERENCES 116

9 0 0 2 9 0 1 0 8

"BEST AVAILABLE COPY"

SUMMARY AND CONCLUSIONS

This analysis was made to assess the potential impact on the environment of transporting fuel and solid radioactive wastes for nuclear power plants under existing regulations. Most plants do not ship gaseous or liquid wastes off-site.

The regulations are based on two main considerations:

a) to protect the employees, transport workers and the public from external radiation in the transport of radioactive material under normal conditions, and

b) to assure that the packaging for radioactive materials is designed and constructed so that, under both normal and accident conditions, the radioactive material is unlikely to be released from the packaging.

The objectives of the first consideration are met by limitations on the radiation levels on the outside of packages of radioactive material and stowage and segregation provisions. Based on the detailed analysis which follows, we have estimated that the radiation dose under normal conditions of transport to the individual receiving the highest exposure is unlikely to be more than 500 mrem/yr and the average radiation dose to those individuals in the highest exposed group is about 100 mrem/yr. The Federal Radiation Council has recommended that the radiation doses from all sources of radiation other than natural background and medical exposures should be limited to 5000 millirem/year for individuals as a result of occupational exposure and should be limited to 500 millirem/year for individuals in the general population. The cumulative radiation dose to all transport workers is about 3 man-rem* per reactor year. The cumulative radiation dose to persons other than transport workers is about 2 man-rem per reactor year distributed among approximately 600,000 people. For purposes of comparison, the dose due to the average normal background radiation, about 130 mrem/person/year, would be about 78,000 man-rem per year for this group of 600,000.

The heat and weight in any one shipment and the total number of shipments from a typical light water reactor are small so there will be no appreciable effect on the environment from the shipping of the fuel and solid radwaste due to heat, weight, or traffic density.

Safety in radioactive material transport is achieved through design standards on packaging and implementation of a quality assurance program, including prooftesting and independent reviews, to assure conformance, to correct problems, and to help assure continued satisfactory (design) performance over the lifetime of the package under normal and accident conditions.

Every package must be designed and its use monitored to prevent release of radioactive materials not only during normal conditions of transport,

*Man-rem is an expression for the summation of whole-body doses to individuals in a group.

90029 0109

BLANK PAGE

"BEST AVAILABLE COPY"

but also under other postulated abnormal circumstances developed through analyses and defined in the regulations.

The industry bears the primary responsibility for assuring safety in the packaging and transport of radioactive materials. The industry's activities are regulated by the Atomic Energy Commission (AEC) and the Department of Transportation (DOT). The regulatory functions include review of designs, quality assurance programs, testing, and use of packaging for radioactive materials.

The probability of an accident occurring in transportation is small, about one accident per million vehicle miles, and decreases with increased severity of the accident to about one severe accident per 100 million vehicle miles and one extremely severe accident per 10 million-million vehicle miles. For a typical nuclear power reactor, an estimated 112 shipments of fuel and wastes involving a total shipping distance of about 90,000 vehicle miles will be made each year. Based on these data, a shipment of fuel or waste will be involved in a transportation accident once in about 10 years and one accident out of about 100 will be severe. Because of the package design and quality assurance, the probability of a breach in the containment of a package involved in an accident is small and related to the accident severity. Because of regulatory limits on contents of packages and the nature and form of the unirradiated and irradiated nuclear fuel and solid radioactive waste from a light-water nuclear power plant, the amount of radioactivity which would be released if a breach were to occur in a package is unlikely to be large and although the consequences could be serious, they would not be catastrophic.

When both probability of occurrence and extent of the consequences are taken into account, the risk to the environment due to the radiological effects from transportation accidents is small. Accidents to packages more severe than the design basis accident for type B packages can occur, but the probability is very low (see Appendix A), and, although the consequences could be severe (see Appendix B), the risk is small. Because the risk from such events is so low and has been discussed in this Environmental Survey, evaluation of the environmental impact of such accidents would not be required of applicants in future Environmental Reports.

Within the United States over the past 25 years, there have been only about 300 reportable accidents in transportation involving packages of radioactive material. Only about 30% involved any release of contents or increased radiation levels, and none resulted in perceptible injury or death attributable to the radiation aspects. Millions of packages of radioactive material, including more than 3600 packages of irradiated fuel, have been transported during that period by all modes of transport.

The risk of injury or property damage from accidents due to common (i.e., other than radiological) causes in the transportation of nuclear fuel and solid radioactive waste also is small.

0 1 1 0 9 0 0 2 9

SECTION I. INTRODUCTION

A. Scope

In implementation of the National Environmental Policy Act of 1969, the AEC requires applicants for a license to operate light-water nuclear power plants to evaluate the environmental impact of transportation of nuclear fuel and solid radioactive wastes to and from the plant.

This is a general analysis of the impact on the environment from the transportation of nuclear fuel and solid radioactive wastes to and from a light-water-cooled nuclear power reactor in accordance with the present regulatory standards and requirements. The analysis is based on shipments of fresh fuel to and irradiated fuel and solid radioactive waste from a boiling water or a pressurized water reactor with design ratings in the range of 3,000 to 5,000 megawatts thermal (MWt) or 1,000 to 1,500 megawatts electrical (MWe). The nuclear fuel for the reactors considered was in the form of sintered uranium dioxide pellets encapsulated in zircaloy rods with a U-235 enrichment ranging from 1% to 4% by weight of the uranium present. The analysis was made with the assumption that present methods of transportation and existing standards and criteria for transportation will be applied over the operating life of the reactor.

Estimates were made of the impact from radiological effects and from common causes under normal conditions of transport and accidents. Transportation by truck, rail, and barge was analyzed, and probabilities of accidents calculated.

B. Purpose

This Environmental Survey dealing with the transportation of radioactive materials for nuclear power reactors under the present regulatory standards is being circulated as a "generic" analysis. It appears likely that the environmental impact of transportation from most nuclear power stations would fall within the scope of the parameters specified in this general analysis. It is anticipated that this "generic" analysis will provide the basis for the applicant's and the Commission's analysis of the impact on the environment of the transportation of fuel and solid radioactive waste under normal conditions of transportation and the design basis accident, i.e., accident damage test conditions specified in the regulations.

"BEST AVAILABLE COPY"

C. Principles of Safety in Transport

Most shipments of radioactive material move in routine commerce and on conventional transportation equipment. Shipments are therefore subject to the same transportation environment, including accidents, as non-radioactive cargo. Although a shipper may impose some conditions on the carriage of his shipment, such as speed limitations, providing an escort, etc., most of the conditions to which his shipment is subjected and the probability of his shipment being involved in an accident are not subject to his control. Protection of the public and transport workers from radiation during the shipment of radioactive materials is achieved by a combination of limitations on the contents according to the quantities and types of radioactivity and standards and criteria for package design and control. Safety in transportation does not depend on special routing, although special routings are used at some bridges and tunnels to avoid possible interference with the flow of traffic should an accident occur.

Primary reliance for safety in transport of radioactive material is placed on the packaging. The packaging must meet regulatory standards established by the Department of Transportation, Atomic Energy Commission and the States (see Section III) according to the type and form of material for containment, shielding, nuclear criticality safety, and heat dissipation. The standards provide that the packaging shall prevent the loss or dispersal of the radioactive contents, retain shielding efficiency, assure nuclear criticality safety, and provide adequate heat dissipation under normal conditions of transport and under specified accident damage test conditions, (i.e., the design basis accident). The contents of packages not designed to withstand accidents are limited, thereby limiting the risk from releases which could occur in an accident. The contents of the package also must be limited so that the standards for external radiation levels, temperature, pressure, and containment are met.

Protection from external radiation is provided by limitations on the radiation levels on the outside of packages of radioactive materials and stowage and segregation provisions. The number of packages in a single vehicle or area is limited to control the aggregate radiation level and to provide nuclear criticality safety. Minimum separation distances from people and undeveloped film are specified for loading and storing packages of radioactive material to keep the exposure of persons and film to a minimum.

1110 0206

SECTION II. SUMMARY OF RESULTS OF THE DETAILED ANALYSES

A summary of the results of the analysis of the impact on the environment from transportation of fuel and solid radwaste associated with a light water nuclear power plant is given below. Details on each type of shipment are given in the Sections which follow. An analysis of accidents and some methods of calculations of doses and risks are presented in the Appendices.

A. Bases for Analyses

The estimates of the environmental effects of transportation are based on average conditions for such parameters as shipping distance, weather, radiation levels, package contents, population density, and accident frequency. The numbers of shipments of fuel and radwaste were estimated on the basis of those anticipated from a typical 1100 MWe light-water-cooled nuclear reactor. The degree of package damage assigned to different accidents represents judgment based on the results of tests of packages and the small number of accidents to date involving packages of radioactive material. The basis used for estimating the environmental effects is considered appropriate because, in the Staff's view, the effects are so small that further refinement is not warranted. If adjustment is desired for a particular case, suitable factors will be found in the details of the technical assessment.

The total number of shipments estimated to be shipped for a typical reactor each year are shown in Table 1, together with estimated average number of miles each type of shipment would be carried.

B. Heat

The amount of heat released from a shipment of unirradiated nuclear fuel or of solid radioactive waste is negligible. A rail cask containing irradiated fuel may release as much as 70 kilowatts of heat or about 250,000 Btu/hr. This might be compared to about 50 kilowatts of waste heat released from a 100 horsepower truck engine during full power operation. Even in those cases where more than one cask is located in an area, such as two or more loaded casks on a barge or train, the amount of heat released during shipment is too small to have any appreciable effect on the environment along the shipping route.

"BEST AVAILABLE COPY"

TABLE 1. SUMMARY OF INFORMATION ON SHIPMENTS

Type of Shipment	Mode of Transport	Estimated Weight (metric tons)	Heat Generated by Shipment (kilowatts)	Number of Shipments per 1100 MWe Reactor Year	Estimated Average Shipping Distance (miles)	Total Shipping Distance per Reactor Year (miles)
unirradiated fuel	truck	24	neg.	6* (18 initial)*	1000	12,000**
irradiated fuel	truck	35	10	60*	1000	120,000**
	rail	100	70	10*	1000	20,000**
	barge	150	140	5*	1000	10,000**
solid radioactive waste	truck	16	<.001	46	500	23,000
	rail	80	<.005	11	500	5,500

* plus an equal number of shipments for return of empty packagings

**only half of this distance involves shipments of radioactive material, the other half involves return of empty packagings.

The temperature on the accessible surface of packages in transport is limited by DOT regulations to 122°F if the package is shipped other than under "full load" conditions. Under "full load" conditions, the shipper has exclusive use of the vehicle and the cargo is loaded by the consigner and unloaded by the consignee so that contact with the package is controlled. Under "full load" conditions, the temperature on the accessible surface of the package is limited to 180°F. Under normal conditions of transport, there is unlikely to be damage to property or injury of persons due to external temperature.

C. Weight and Traffic Density

Shipments by truck must meet State restrictions on gross weight of vehicle which ensures against damage to bridges or roadways. The total number of shipments per reactor year, about 200, is too small to have any measurable effect on the environment due to the resultant increase in traffic density.

The weights of rail and barge shipments must meet the regulatory limitations of the Federal Railroad Administration and the U. S. Coast Guard and are within the range of weights of other commodities routinely handled on those modes of transport. The weights and numbers of shipments are too small to result in any measurable effects on the environment.

D. Radiation Exposures Under Normal Conditions

A summary of the estimated radiation exposures under normal conditions is given in Table 2. These estimates were based on average, realistic conditions as to radiation levels outside of packages, shipping distances, exposure times, distances from shipments, and numbers of people exposed. The details are given in the individual Sections which follow. The method of calculating the exposure of persons along the route is given in Appendix D.

The total impact on the environment from radiation in the transportation of fuel and wastes from a power reactor under normal conditions, based on the present packaging standards, is estimated to be a population dose of 5 man-rem per reactor year. An individual transport worker is unlikely to receive more than 500 mrem/yr. The average radiation dose to the highest exposed group of transport workers (truck drivers) is estimated to be about 100 mrem/yr. The cumulative dose to all transport workers is estimated to be about 3 man-rem per reactor year. The cumulative radiation dose to persons other than transport workers would be about 2 man-rem per reactor year, distributed among approximately 600,000 people. This is about one-millionth of the applicable Federal radiation

"BEST AVAILABLE COPY"

TABLE 2

ESTIMATED RADIATION DOSES
UNDER NORMAL CONDITIONS
PER REACTOR YEAR

Unirradiated fuel (by truck only)	Man-rem	Number of People
Transport workers	0.01	40
General public - onlookers	0.0003	60
- people along the route	0.001	3×10^5

Irradiated Fuel	Truck		Rail		Barge	
	Man-rem	No. People	Man-rem	No. People	Man-rem	No. People
Transport workers	1.2	4	0.05 (2.6)*	100 (22)*	0.04	10
General public - onlookers	0.8	600	0.1	100	-	-
people along the route	1	3×10^5	0.2	3×10^5	0.03	1×10^5

Solid Waste	Truck		Rail	
	Man-rem	No. People	Man-rem	No. People
Transport workers	1	4	0.05	100
General public - onlookers	0.6	500	0.1	100
people along the route	0.4	1.5×10^5	0.1	1.5×10^5

*For shipments transported by truck from the reactor site to a nearby railroad, transferred from truck to railroad car, and shipped by railroad car to the fuel recovery plant.

protection guide for the average exposure to the general population from all sources of radiation other than natural background and excluding radiation exposure for medical purposes. The dose to those same persons due to the average normal background radiation, about 130 mrem/person/year, would be about 78,000 man-rem per year.

E. Radiation Risk from Accidents

The risk of radioactive contamination or radiation exposure from accidents in transportation is extremely small.

As shown in the analysis of accidents in Appendix A, the probability of a truck, rail, or barge accident occurring in transportation is very small, about 10^{-6} per vehicle mile. Based on those accident statistics, the average number of shipments per year and average shipping distances, a shipment of nuclear fuel, solid radwaste, or empty fuel shipping containers for a typical nuclear power reactor would be involved in a transportation accident offsite about once for each 5 years of reactor operation.

More than 70% of the accidents which occur are of a minor nature and would produce little or no damage to a shipment. Less than 1% of the accidents involve a severe impact or fire.

The probability of a release of radioactive material or an increase in external radiation levels in an accident are small. One-third of the shipments are empty containers. In a severe accident, the vehicle may absorb most of the impact and the fire may not involve the shipment of radioactive material. Packages containing radioactive materials which might present serious potential radiation hazards if released must be designed to withstand accident conditions. The regulations limit the contents of packages not designed to withstand accident conditions, so only a small amount of radiation exposure would result should the package be severely damaged.

The extent to which the material is dispersed and the amount of radiation exposure that results from the release are affected by the weather conditions and the number of people in the vicinity of the accident (see Appendix B). The probability is small of a severe accident occurring in a location where the population density is high.

9 0 0 2 9 0 1 1 3

"BEST AVAILABLE COPY"

F. Risk from Common Causes

The impact on the environment from accidents in transportation of unirradiated fuel, irradiated fuel, solid radwastes, and empty containers due to common (non-radiological) causes is estimated to be 1 fatal injury in 100 reactor years, 1 non-fatal injury in 10 reactor years, and property damages of about $475 per reactor year (see Appendix C).

G. Alternatives

The risk of radioactive contamination or radiation exposure to the environment from the transportation of fuel and radwaste from a power reactor in containers designed to meet the present packaging standards is small. Alternatives and additional measures such as tightening of the standards to require additional accident protection and special routing of shipments, providing escorts, and requiring additional shielding in containers, were examined for the general case. Although some of the alternatives offer apparent advantages in terms of reducing the radiological effects on the environment, the overall risk from radiological effects is small. Any reduction in those effects by additional measures would to some extent be outweighed by an increase in adverse effects of a non-radiological character and by a large commitment of additional effort and equipment. Adoption of one or more of the alternatives in specific cases might be justified. However, the advantages of the alternatives do not appear to be sufficient to warrant their adoption as general requirements.

SECTION III. REGULATORY STANDARDS AND REQUIREMENTS

Packaging and transport of radioactive materials are regulated at the Federal level by the Atomic Energy Commission,[1] the Department of Transportation (DOT),[2] and the U. S. Postal Service.[3] Certain aspects, such as limitations on gross weight of trucks and transportation not subject to DOT, AEC, or the Postal Service regulations, are regulated by the States. Most States have adopted regulations pertaining to intrastate transportation of radioactive materials which require the shipper to conform to the packaging, labeling, and marking requirements of the U. S. Department of Transportation to the same extent as if the transportation were subject to the rules and regulations of that agency.

A. Packaging Standards and Requirements

The packaging standards and criteria are found in the regulations of the AEC (10 CFR Part 71) and the regulations of the DOT (49 CFR Parts 170 through 179).

The present criteria provide assurance that packaging designed to meet such standards can be carried on all modes of transport and will withstand the conditions likely to be encountered in accidents. As developed, the criteria specify tests of packaging which can be carried out either in the laboratory or in the field with conventional and readily available equipment and facilities. The criteria, which were first published by the International Atomic Energy Agency in 1964, have been adopted in many international and national transportation regulations and served as the basis for the regulatory standards and criteria of the U. S. They were based on a detailed analysis of normal and accident conditions in transport and nearly 20 years of experience in shipping many types of radioactive materials.

To meet the regulatory standards, packaging must be designed and constructed to provide two and, in some cases, three levels of protection.

The packaging must function in the normal transportation environment with a high degree of reliability. Systems selected to achieve the basic design functions, i.e., containment, shielding, heat dissipation, and nuclear criticality safety, must provide a high degree of inherent safety under normal conditions and have a high tolerance for malfunctions, off-normal conditions, and accidents should they occur. Each shipping container is checked routinely to assure that the "as built" high quality is maintained throughout its lifetime.

Despite the best possible design practices and the highly assured capability for reliable and practicable operation, allowance is made for malfunctions, off-normal conditions, and accidents by providing an additional level of protection to resist or accommodate such occurrences. As with the primary level of protection, conservative design practices, adequate safety margins, and inspectability are incorporated into these secondary protection systems to assure both the effectiveness and reliability of the second level of defense. In addition, these systems are designed to be routinely examined and tested so that there is full assurance that they will operate reliably if required.

As an added measure of safety, where the design includes mechanical systems essential to safety, the design is evaluated under normal conditions and against a series of severe hypothetical accident conditions, assuming certain of these protective systems fail. If such failure could produce serious consequences, additional protective measures, or redundancy of the safety system must be provided.

9 0 0 2 9 0 1 1 4

"BEST AVAILABLE COPY"

TABLE 3. QUANTITY LIMITS AS RELATED TO PACKAGE REQUIREMENTS

Transport Group	Examples	Exempt Quantity (curies)	Type A Package (curies)	Type B* Package (curies)
I	^{239}Pu, ^{242}Cm, ^{252}Cf	10^{-5}	10^{-3}	20
II	^{210}Bi, ^{210}Pt, ^{90}Sr	10^{-4}	5×10^{-2}	20
III	^{137}Cs, ^{192}Ir, ^{131}Ir	10^{-3}	3	200
IV	^{76}As, ^{14}C, ^{45}Ca	10^{-3}	20	200
V	Noble gasses, ^{85}Kr	10^{-3}	20	5,000
VI	^{37}Ar, ^{133}Xe, ^{85}Kr uncompressed	10^{-3}	1,000	50,000
VII	Tritium - as a gas or in luminous paint	25	1,000	50,000
Special Form	Co^{60} radiography source, Pu-Be neutron source	10^{-3}	20	5,000

*A Large Quantity is defined as any quantity in excess of a Type B quantity.

The type of packaging is specified in DOT regulations, 49 CFR 173, according to the type and quantity of radioactive material (see Table 3).

Radioactive materials are divided into two broad classes: (1) "special form" which is a massive, non-friable, solid material or material confined in a high integrity capsule of inert material, and (2) "normal form" which applies to all radioactive materials which are not "special form." Normal form radioactive materials are classified into seven groups of radionuclides based primarily on radiotoxicity of the radionuclides. Package limits for the seven transport groups and "special form" are shown in Table 3.

Small quantities of radioactive materials, certain concentrations, small quantities of radioactive materials in manufactured goods, and low specific activity materials may be shipped in strong industrial packages and are exempt from specification packaging, marking and labeling with the radioactive material label. The Postal Service regulations generally allow the exempt quantities to be shipped by mail in leakproof containers.

Type A quantities of radioactive materials must be shipped in packaging, identified as Type A packaging, which will prevent loss or dispersal of the radioactive contents and retain shielding efficiency and effectiveness of other safety features under normal conditions of transport. Standards for evaluation and testing of adequacy with respect to normal conditions specified in AEC and DOT regulations include temperatures ranging from -40°C to 130°C, all surfaces except the bottom wet for 30 minutes, being subjected while wet to a 4 foot free fall, vibration normally encountered in transport and external pressure reduced to 0.5 atmosphere.

Quantities exceeding Type A quantities must be shipped in Type B packaging. Type B packaging must be designed to withstand normal transport conditions without loss of contents or shielding efficiency and to suffer no more than a specified loss of contents or shielding efficiency if subjected to a specified sequence of accident damage test conditions. That damage test sequence includes: (1) a free fall from a height of 30 feet onto an unyielding surface with the package landing in the orientation which does the most damage, (2) a free fall from a height of 4 feet onto a 6-inch-diameter steel plunger long enough, and with the package in the orientation, to do maximum damage, (3) heat input from exposure for 30 minutes to a fire or other radiant environment having a temperature of 1475°F and an emissivity of 0.9, and (4) for fissile material, immersion in water to a depth of 3 feet for 24

"BEST AVAILABLE COPY"

hours. Those test conditions make up the design basis accident for type B packages; i.e., package designs which meet the criteria under these test conditions are considered to provide adequate protection to the public and operating personnel in transportation accidents.

Large quantities must be shipped in Type B packaging which provides for adequate dissipation of heat. In addition, there must be no loss of contents at an external pressure of 25 psig, which is approximately equivalent to immersion in water to a depth of 50 feet.

With respect to heat dissipation, the regulations require the package to be designed so that the temperature rise due to decay heat will not adversely affect the package or the contents and will not cause excessive pressure. The accessible surface of the package must not exceed a temperature of 180°F.

B. Nuclear Criticality Safety

Fissile material (i.e., uranium-233, uranium-235 and plutonium) in quantities exceeding 15 grams per package or in concentrations exceeding 500 grams of U-233 or Pu per liter or 800 grams of U-235 per liter require some control in transport to assume safety from accidental criticality. Nuclear criticality safety in transport is provided by assuring that the contents of each package of fissile material is subcritical when delivered to a carrier for transport and that the package is so designed that it will remain subcritical under all conditions likely to be encountered in transport, including accidents. In addition, the contents must be limited or the package must be designed so that the number of packages which are likely to be accumulated in one vehicle or area will be subcritical under all conditions likely to be encountered in transport, including accidents and handling errors.

The AEC regulations specify the conditions for evaluating the adequacy of design of a package for fissile material including form and geometry of the contents and moderation and reflection.

The package design must be evaluated against the accident damage test conditions discussed earlier for Type B packages.

A package for fissile material must be so designed and constructed and its contents so limited that the following numbers of such packages can be shown to be subcritical in a moderated and reflected array according to the Fissile Class (I, II, or III) to which the package is assigned.

	Normal Conditions	All Packages Damaged as in Accident Conditions
Fissile Class I	any number	250 packages
Fissile Class II	5 times the allowable number*	2 times the allowable number*
Fissile Class III	beside an identical shipment	the allowable number*

* The allowable number is the number of the same type of packages to be allowed in one shipment.

The conditions for transport vary according to the Fissile Class. Fissile Class II packages are controlled by the carrier as to an allowable number on a vehicle or in one handling or storage area. This is done by the simple system of assigning a number to each package, called a transport index, and requiring the carrier not to allow more than an accumulation of 50 transport indexes on a vehicle or area. This system has been applied to limiting the accumulated radiation level since 1948.

For Fissile Class III, the shipment must be made exclusive use (i.e., the consignor loads the shipment and the consignee unloads the shipment and nothing is allowed on the vehicle other than the consignor's material) or by an escort provided by the shipper who assures the shipment is kept separated from other fissile material, or some other procedure specifically approved by DOT.

Fissile Class I packages do not require limitations on the number of packages in an area or vehicle for nuclear criticality safety.

In some cases physical properties limit the number of packages in a shipment. For example, in most cases one irradiated fuel cask is shipped on a truck or rail car and the cask is shipped exclusive use because of weight limitations on the vehicle even though some designs might meet the Fissile Class I requirements. For unirradiated nuclear fuel, the allowable number of packages for Fissile Class II in the case of one design of PWR package is 20. However, because of the size and weight of each package, only 6 or 7 can be loaded on one truck.

C. Packaging Design Review

At the present time, the AEC reviews and issues approvals for designs of packages for shipping large quantities and fissile materials. DOT

9 0 0 2 9 0 1 1 6

"BEST AVAILABLE COPY"

reviews and issues approvals for Type B package designs and, based on AEC evaluations, issues approvals for large quantity and fissile material package designs.

Applicants for approval of a packaging design must provide a detailed analysis of that design to demonstrate that the design meets the packaging standards and criteria. The demonstration that the packaging design is adequate may be made by quantitative assessment, tests of models of packaging details or mock-ups representing the methods of construction used, extrapolation from test results for similar designs or designs employing similar construction features, actual tests of samples of packaging made to the design, or other evidence.

The DOT plans to discontinue issuing specific approvals for radioactive material packages which meet all of the packaging standards. In December 1971, the AEC and DOT published[4] proposed regulatory changes under which DOT would transfer to the AEC all of the radioactive material packaging approval functions. The final regulatory changes are expected to be published within the next few months.

D. Quality Assurance and Control

It is possible that a package will be constructed or used in a manner not in accordance with the design; however, the likelihood of such errors is considered small in view of the regulatory requirements for quality assurance and for various observations and tests before each shipment.[5]

Under the Department of Transportation regulations, each fabricator of specification containers must register with, and is subject to inspection by, DOT.

The regulations specify certain tests that must be carried out on such containers. Under AEC regulations, licensees who wish to fabricate casks are asked to describe their quality assurance program when they apply for approval of the design. In addition, the regulations require that packages for fissile material and large quantities be tested prior to first use with respect to shielding and heat dissipation and prior to each use as to proper assembly, proper closing, temperature, pressure, and presence of neutron absorbers.

E. Radiation Level Limitations

External radiation exposure of transport workers and the general public in the transportation of packages of radioactive material is controlled during transport by several different methods.

The radiation emitted from individual packages of radioactive material is limited by the DOT regulations[6] to no more than 200 mrem/hr on the surface to limit the direct exposure to the person handling the package, and no more than 10 mrem/hr at 3 feet from the surface of the package to limit the radiation level to which persons and property in the vicinity of the package would be exposed.

If a package is shipped in a closed truck or rail car under the "exclusive use" conditions (which means it is loaded by the consignor and unloaded by the consignee), the radiation level at 3 feet from the surface of the package is limited to 1000 mrem/hr provided the radiation level does not exceed 200 mrem/hr at the surface of the vehicle, 10 mrem/hr at 6 feet from the outside surfaces of the vehicle, and 2 mrem/hr in either the driver's compartment or other normally occupied positions in the truck or rail car.

As a simple indicator of the radiation dose rate from an individual package, the regulations define one "transport index" (TI) as being equal to 1 mrem/hr at 3 feet from the surface of the package. The regulations specify limits for aggregations of packages in terms of the sum of the transport indexes. The number of packages stored or handled in one area or loaded on one car or vehicle must be so limited that the sum of their transport indexes does not exceed 50. This prevents a large aggregation of packages, each with a significant radiation level, from producing a much higher radiation level than desirable because of the additive effect of the radiation levels from all of the packages.

Simple tables of minimum separation distances[7] from people and unexposed film are specified for packages of radioactive materials in storage and on vehicles in terms of the sum of the transport indexes in each group of packages.

Whether there is one package or a large number of packages in a vehicle or a location, the transport worker or carrier is required to read each TI, add the total number of TI's present, determine from the tables in the regulations the distance those packages must be kept from film and continuously occupied areas, and assure that those separation distances are provided.

The transport index system has also been adapted for limiting aggregations of packages containing fissile radioactive materials to assure nuclear criticality safety. The shipper determines in accordance with specific criteria laid down in the AEC regulations of the AEC a transport index figure which is to be assigned to the fissile material

9 0 0 2 9 0 1 1 7

"BEST AVAILABLE COPY"

package. For shipping, the shipper assigns to each package of fissile material the nuclear safety TI as calculated or the radiation level TI (as described earlier), whichever is the higher. The transport worker, as is the case for radiation levels, adds the TI's and by complying with the limitation on the number of TI's in any one vehicle or location, limits the amount of fissile material in all types of packages to safe limits. The TI assigned to individual packages of fissile material for nuclear safety reasons takes into account that, in cases other than exclusive-use shipments, 2 times, or as many as 5 times the permitted total number of TI's in a collection of packages may be inadvertently placed together.

It will be recognized that mixing nuclear safety TI's with radiation level TI's in the course of transport increases the margin of safety for both since they are not synergistic.

F. Surface Contamination Levels

DOT regulations[8] also require that there be no significant removable surface contamination on the external accessible surfaces of packages when they are shipped. Levels of removable contamination on the surfaces are determined by a wipe test. The regulations consider the level is "not significant" if the activity on the wipe does not exceed 10^{-11} Ci/cm^2 for beta-gamma emitters and 10^{-12} Ci/cm^2 for alpha emitters. Any fixed contamination of the surface is limited by the external radiation level limitations discussed in the previous paragraphs.

G. External Temperature

The DOT regulations[9] limit the temperature at any accessible surface of the cask to not more than 122°F at any time during transport, except that for full load or exclusive use shipments, the temperature may be 180°F.

H. Warning Labels

Each package of radioactive material is required by DOT regulations[10] to be labeled on two opposite sides with a distinctive warning label. Each of three label formats bears the unique trefoil radiation symbol. The label alerts persons handling packages that the package may require special handling. If the background color of the label is all white, the radiation is minimal and nothing special is required for that package. If, however, the background of the upper half of the label is yellow, a radiation level requiring consideration may exist at the

outside of the package, and an indication of what controls must be exercised for that package is related to the transport index concept discussed above. If the package bears a yellow label with three stripes, the rail or highway vehicle in which it is carried must be placarded.

I. Placards

A truck or rail car carrying any package labeled with a Radioactive Yellow-III label must be placarded on the outside.[11] The placard for rail cars bears the distinctive trefoil symbol and, for trucks, the word RADIOACTIVE in letters large enough to catch the eye. The principal purposes of placards are to advise freight handlers of the presence of radioactive material with TI's inside the vehicle, or to indicate the presence of special types of shipments (e.g., a Fissile Class III package, a special permit package, or a large source package); and to warn passers-by and emergency crews that radioactive material shipments are in the vehicle. This marking or placarding is intended to encourage persons not to remain in the vicinity of the vehicle unnecessarily so as to reduce exposures which would otherwise result from loitering in the vicinity. Also, the placard will alert emergency crews to the need for taking appropriate precautions in case such vehicles are involved in accidents. Cars and trucks carrying carload or truckload lots of radioactive materials, packages with significant external radiation levels or containing large quantities of radioactive material, or Fissile Class III shipments are required to be placarded with a "Radioactive" placard.

J. Capacity for Coping with Accidental Releases

The consequences of an accident involving radioactive material are mitigated by the procedures which carriers are required to follow.[12] These procedures include: segregation of packages and materials from persons; immediate notification of the shipper and DOT in case of an accident, fire, or leaking package; and a requirement that vehicles, cars, building areas, and equipment not be placed in service again until surveyed and, where necessary, decontaminated.

Trained personnel equipped to monitor the area and competent to act as advisers are available through an inter-Governmental radiological assistance program. The radiological assistance teams are dispatched in response to calls for emergency assistance. This assistance has been made available in the few transportation accidents involving radioactive materials shipments which have occurred in recent years. Should a major release occur, this type of assistance might help reduce the impact of the release.

"BEST AVAILABLE COPY"

K. Shipper's Certification

Before delivering a package to a carrier for transport, the shipper must determine that there is no "significant" loose radioactive contamination on the outside of the package, that the radiation levels on the surface of the package and at 3 feet from the package meet the specified regulatory levels, and that the marking and labeling are in compliance with the requirements. The shipper also must certify[13] in writing on the shipping papers that the radioactive materials are properly classified, described, packaged, marked, and labeled and are in proper conditions for transport according to the applicable regulations of the Department of Transportation.

L. Weight and Traffic Density

State highway weight restrictions limit the gross weight of trucks for routine shipments so that the gross weight of casks are limited to about 25 tons. Shipments of casks weighing up to about 35 tons may be allowed in most States under a special overweight permit. The States often prescribe special routing for overweight shipments and in some cases restrict the period during which the truck can travel.

Repetitive shipments of overweight loads may cause breakup of the roadway. Some irradiated fuel shipping casks may require overweight permits. The number of such shipments is limited to about 60 round trips per year per reactor. That number of overweight shipments would not be expected to have any adverse effect on the roadways. Rail shipments of 50 to 100 tons of other commodities, such as coal, are routinely handled, so rail shipments of casks of comparable weights would offer no unusual loading for rail facilities. Barges also routinely transport cargoes weighing more than 100 tons.

With respect to traffic density, the average number of truck shipments of nuclear fuel, solid rad-waste, and empty packagings is estimated to be about 200 per year for a typical reactor and involves a total of about 155,000 truck miles. The number of shipments and miles travelled are small compared to the present traffic densities and miles travelled by trucks for all purposes.

As an indication of the traffic flow, an average of 43,500 motor vehicles per day traveled over one section of I-5 between San Diego and Los Angeles in 1971. According to the Federal Highway Administration, the average number of trucks per day on any given section of U. S. highway generally varies from about 100 to 10,000. The total number of truck miles traveled in 1971 is estimated to be over 12 billion.

M. Changing the Standards and Requirements

The safety of radioactive material transport is assured not only through the design standards for packaging but also by quality assurance programs to assure conformance with approved designs, to correct problems and to help assure continuing satisfactory performance over the lifetime of the package. Despite use of the best possible design practices, assurance of the capability for reliable and predictable operations of the packaging and the transportation equipment, employing measures to reduce the already low probability of accidents, and provisions to mitigate the consequences of accidents which may occur, errors, malfunctions, off-normal conditions, and accidents will occur. Such accidents are required to be reported and will be investigated. If as a result of such events, data and experience associated with the changing characteristics and increased numbers of shipments of radioactive material, or changes in the useful life of the equipment or in the transportation methods, evidence becomes available that accepted guidelines are being exceeded or the public is being unduly exposed or their health and safety impaired, action can and will be taken to correct the causes in a timely manner. The regulatory requirements, codes, standards, specifications and criteria applicable to the designs of packages, loading patterns, protective measures, and quality assurance practices for the transportation of radioactive material can be modified should the need for changes become evident.

The probability of leakage due to human error can be reduced by increased control over the preparation of packages for shipment. Two actions already are underway which are intended to increase that control. DOT recently amended its regulations[14] to require that shippers carry out certain examinations and test procedures on packages prior to shipment. The Atomic Energy Commission is considering expanding its quality assurance requirements applicable to packages used by its licensee-shippers.

9 0 0 2 9 0 1 1 9

"BEST AVAILABLE COPY"

IV. DETAILED ANALYSIS OF THE ENVIRONMENTAL IMPACT OF TRANSPORTING UNIRRADIATED FUEL TO A TYPICAL LIGHT-WATER NUCLEAR REACTOR IN ACCORDANCE WITH PRESENT REGULATORY STANDARDS AND REQUIREMENTS

A. Characteristics

The nuclear fuel for an 1,100 MWe reactor typically consists of 100 metric tons (MT) of uranium for a pressurized water reactor or 150 MT for a boiling water reactor. The uranium enrichment varies from about 1% to 4% U-235 by weight depending on the reactor design. The fuel is in the form of uranium dioxide which has been sintered and compacted to form very dense, high-strength, high-melting-point pellets approximately 1-1/4 centimeters (cm) in diameter and 2 cm in length. The pellets are stacked in zircaloy tubing which is welded shut at both ends to form a fuel rod. The fuel rods are subjected to rigorous quality control to ensure their integrity prior to use in the reactor. A fuel element is made up of 50 to 200 fuel rods about 4 meters (m) long, weighs from 250 to 700 kilograms (kg) and contains approximately 200 kg of uranium for a BWR or 500 kg of uranium for a PWR.

About one-third of the fuel in a PWR or about 1/5 of the fuel in a BWR, i.e., about 30 MT of fuel, is replaced each year. Unirradiated fuel (also referred to as cold or fresh fuel) is shipped by truck, usually two fuel elements per package, in long packages, 16 packages of BWR elements or six packages of PWR elements constituting a truckload. About six truckloads of fuel elements are shipped to a reactor each year.

B. Packaging

As indicated in the introduction, the packaging provides much of the assurance of safety in transport of radioactive materials. The design of the packaging for shipment of unirradiated fuel, the contents, the transport index to be assigned each package (if Fissile Class II), and any special procedures to be followed in loading the fuel into the package and closing the package must meet standards set forth in AEC regulations.[1] Each package design must be reviewed and approved by the AEC prior to first use. Labeling of the package and other transport conditions are specified in DOT regulations.[2]

The packaging must ensure against nuclear criticality under both the normal conditions of transport and accident damage test conditions and prevent loss of contents under normal conditions of transport.

The fuel elements are usually enclosed in a plastic bag and placed in a metal container which supports the fuel element along its entire length during the course of transportation. A typical shipping container for PWR fuel elements is a cradle assembly consisting of a rigid beam or "strongback" and a clamping assembly which holds the fuel elements firmly to the "strongback." The "strongback" is shock-mounted to a steel outer shell by shear mounts. BWR fuel elements are shipped in steel boxes which are positioned in an outer wooden box by cushioning material. Packaging for PWR fuel elements is cylindrical in shape, approximately 1.2 m in diameter and 4.9 m long and ranges in weight when loaded from 2800 to 4000 kg. Packaging for BWR fuel elements is rectangular in shape, approximately 1 m high, 1 m wide, and 5.2 m long. When loaded, the package weighs up to 1300 kg. Examples of types of shipping containers are shown in Figures 1, 2, and 3.

C. Transport Conditions

Almost all shipments of unirradiated fuel are now, and will continue to be, made by truck. Rail shipments take too long, and many nuclear power plants do not have rail facilities. Water shipments take even longer, and there are very few convenient barge routes between the fuel fabricators and the nuclear power plants. Shipments by air are also unlikely, in spite of the short transit time. The packages are long (about 5 m), freight rates are high, and most reactors are some distance from the major airport facilities having cargo aircraft.

It will require about 18 truckloads of fuel to load the reactor initially; thereafter, about six truckload shipments of fuel will be required annually for refueling. Each shipment will travel a distance of about 1000 miles on the average, (a minimum distance of 25 miles to a maximum of 3,000 miles).

In most cases, a shipment of unirradiated fuel will be transported by exclusive use, i.e., as a "full load." The packages would be loaded on the truck at the fuel fabrication plant by the shipper, transported by the carrier directly to the nuclear power plant and unloaded by the power plant personnel, with no intermediate off-loading, storage, or intervehicular transfers enroute. No other shipments would be loaded on the vehicle except by the shipper himself. Average transit time will be about 3 days, based on present experience.

FIGURE 1

BWR FUEL ELEMENT SHIPPING CONTAINER

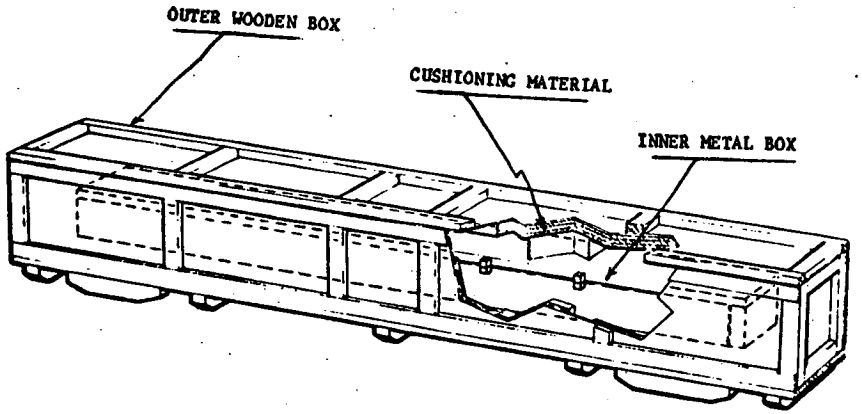

9 0 0 2 9 0 1 2 1

"BEST AVAILABLE COPY"

FIGURE 2

BWR FUEL ELEMENT SHIPPING CONTAINER

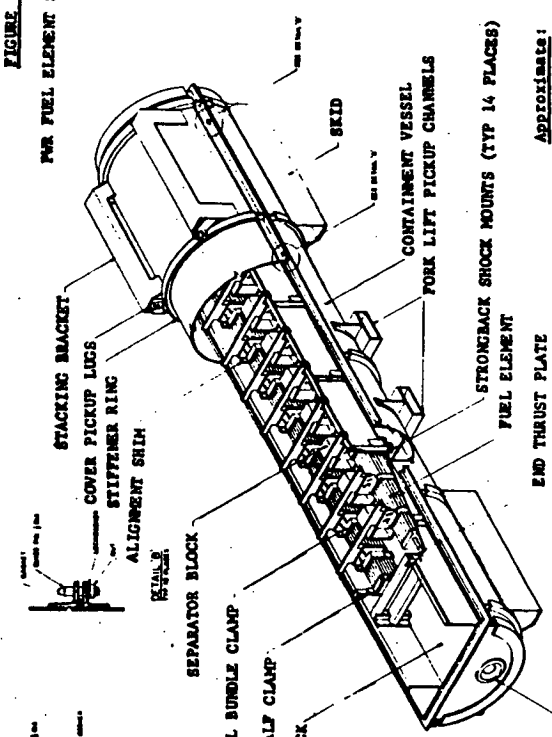

Approximate:

Length	5.5 meters
Diameter	1 meter
Weight	
empty	2 tons
loaded	3.7 tons

"BEST AVAILABLE COPY"

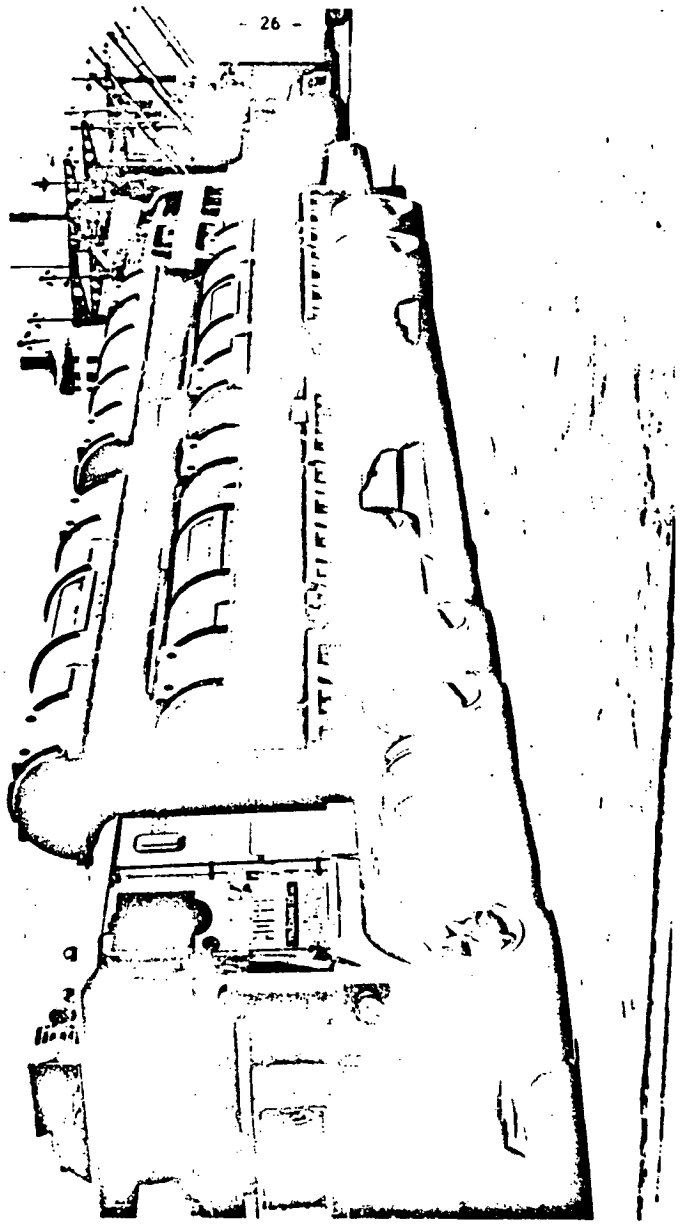

Figure 3 TRUCKLOAD OF COLD FUEL

9 0 0 2 9 0 1 2 2

Some shipments will be made "less-than-truckload" (LTL); i.e., one or two packages shipped via general freight or express and transported in a vehicle along with other freight, in accordance with the DOT regulations. The packages would be moved from truck to truck, through terminals and "in transit" storage. The average transit time will be about 5 days, based on present experience.

D. Effects on the Environment

Normal Conditions

1. Heat

In the case of unirradiated fuel, there will be no readily detectable heat output.

2. Weight and Traffic Density

The number of shipments of unirradiated fuel will average about 6 truckloads per year. The total number of such shipments is too small to have a measurable effect on the environment due to the resultant increase in traffic density.

The number of packages per vehicle can be adjusted so that the transporting vehicle can stay within the cargo gross weight limitations of the State (usually about 25 tons); hence, there would be no excessive load on the roadbeds or bridges for major routes.

3. Radiation

a. External radiation exposure levels

The radioactivity in a package of unirradiated fuel will be about 0.5 to 2.0 curies. Based on data obtained from AEC licensees and contractors, the radiation level at the surface of the unirradiated fuel containers is likely to average about 1 millirem per hour (mrem/hr). For an individual package, the radiation level at 3 feet from the surface of the package would be about 0.4 mrem/hr, and at 15 feet about 0.05 mrem/hr. For a cluster of six to 16 packages, the radiation levels would be about 1.5 mrem/hr at the edge of the cluster, 0.7 mrem/hr at 3 feet, and 0.06 mrem/hr at 15 feet. The radiation level at the outside

"BEST AVAILABLE COPY"

surface of a truck containing a load of unirradiated fuel would be about 1 mrem/hr, and at 3 feet from the surface of the truck about 0.1 mrem/hr. From actual experience, the level in the cab of a truck would be about 0.01 mrem/hr above the natural background.

(1) Truck Drivers. Two truck drivers during a 1000 mile trip would probably spend no more than 20 hours in the cab and about one hour outside the truck at an average distance of 3 feet from the cargo compartment. Under those conditions, each driver could receive about 0.3 mrem/shipment or about 1.8 mrem/yr for six shipments. The cumulative annual dose to all drivers would be about 0.004 man-rem.*

(2) Freight Handlers. For shipments which are transported as "full-loads," exposure to the carriers' freight handlers would be zero, since the packages are loaded by fuel fabrication personnel and unloaded by personnel at the reactor and are not handled enroute.

For less-than-full-load shipments, the packages may spend an average of about 12 hours on loading docks and 24 hours in storage. While in storage, the exposure to handlers is essentially zero.

Handling on the docks requires mechanical equipment because of the weight of the packages. Based on actual handling experience, for about 11 of the 12 hours, the packages would be in relatively isolated "route grouping" areas, with an average of from one to three handlers being exposed a total of from 10 minutes to 1 hour each, from an average distance of 3 to 15 feet. The exposures would then range from 0.01 mrem to 3 mrem per handler. The average exposure would probably be in the range of 0.2 mrem per handler for three handlers, or about 0.004 man-rem per year for six shipments.

*Man-rem is an expression for the summation of whole-body doses to individuals in a group. In some cases, the dose may be fairly uniform and received by only a few persons (e.g., drivers and brakemen); in other cases, the dose may vary and be received by a large number of people (e.g., persons along the shipping route).

During actual transfer of a shipment, three handlers (not necessarily the same three handlers previously mentioned) would probably not be exposed for more than 30 minutes each, at an average distance of 3 feet, each receiving about 0.25 mrem. That would be a total annual exposure of about 0.005 man-rem.

(3) General Public--Onlookers. Members of the general public are normally excluded from loading and unloading operations, but exposures might occur at enroute truck stops for fuel and eating. Trucks are placarded on both sides and the front and rear as "Radioactive." Members of the general public are unlikely to remain near a truck more than a few minutes. If a person spends 3 minutes at an average distance of 3 feet from the truck, the dose would be about 0.005 mrem. If 10 persons, on the average, were so exposed, the total annual dose to such onlookers would be about 0.0003 man-rem.

(4) General Public--Along the Shipping Route. The radiation level at 6 feet from a vehicle loaded with packages of unirradiated fuel will likely be no more than 0.1 mrem/hr. Consider the vehicle travels 200 miles per day, and the mean population density along the route is 330 persons per square mile. For a trip of 1000 miles one way and 6 trips per year, the cumulative annual dose to approximately 300,000 persons in an area along that route between 100 feet and 1/2 mile on either side of the vehicle would be about 0.001 man-rem. See Appendix D for detailed calculation.

(5) Animals. The exposure of domestic animals or pets during transit might occur during terminal transfers of unirradiated fuel packages. If such exposures did occur, the average would probably be about the same as for freight handlers, i.e., about 0.3 mrem each.

(6) Film. Unexposed photographic film can be affected by radiation and is the most radiation-sensitive material likely to be transported together with radioactive materials.

Under full-load conditions, film would not be shipped with unirradiated fuel. Under LTL conditions, DOT regulations require film to be separated by at least 15 feet from shipments of radioactive material. A shipment of film

9 0 0 2 9 0 1 2 3

"BEST AVAILABLE COPY"

within 15 feet of a shipment of cold fuel for 12 hours would receive an exposure of about 0.6 mrem. This would not produce any measurable effect on the film.

Accident Conditions

1. In-Plant Accidents

The "in-plant" radiological aspects of transportation of radioactive material are evaluated separately as part of the licensing procedures or contractual requirements and are not evaluated against the packaging standards and criteria for transportation. For that reason, the "in-plant" aspects have not been included in this analysis.

2. Offsite Accidents

A truckload of unirradiated fuel from a typical reactor may be involved in an accident about once in 110 reactor years (see Appendix A). The packages are so designed that in the unlikely event a shipment of unirradiated fuel is involved in an accident, it is unlikely the fuel will be released.

The fuel rod is constructed to withstand internal and external pressures, from 1000 to 2000 pounds per square inch gauge, anticipated in operation of the reactor. Its construction is such that release of the pellets of uranium oxide or the oxide itself is unlikely. Fuel rods of this type have been tested by being dropped 30 feet onto concrete on end, on the side, and at an angle of 45°, without rupture of the cladding or loss of contents.[15]

The pelletized form of the uranium and its encapsulation make releases of radioactivity in an accident extremely unlikely. Because of the low specific activity of the fuel, the radiation level associated with the fuel itself is quite low. Therefore, except for an accident resulting in nuclear criticality, the radiological impact on the environment from accidents involving unirradiated fuel is negligible.

The packaging is designed to prevent criticality under normal and severe accident conditions. An accident which could lead to accidental criticality would require release of several fuel

elements as a result of severe damage or destruction of more than one package, which is unlikely to happen other than in an extremely severe accident. After release from the packages some of the fuel elements must be assembled in a close array and moderated, for example, by being submerged in water; accidental criticality in air is not possible. Considering the requirements for package design and controls exercised over packages during transport, the probability of such an accident is so small that, in practice, it is considered to be incredible.

Based on the above, the impact on the environment from radiation in transportation accidents involving unirradiated fuel is considered to be negligible.

9 0 0 2 9 0 1 2 4

"BEST AVAILABLE COPY"

V. DETAILED ANALYSIS OF THE ENVIRONMENTAL IMPACT OF TRANSPORTING IRRADIATED FUEL FROM A TYPICAL LIGHT-WATER NUCLEAR REACTOR IN ACCORDANCE WITH PRESENT REGULATORY STANDARDS AND REQUIREMENTS

A. Characteristics

Each year, on the average, from one-fifth to one-third of the fuel in a reactor is replaced with fresh fuel. A fuel element removed from the reactor will be essentially unchanged in appearance and will contain some of the original useful uranium-235, which is recoverable. On the average, the fuel will have been irradiated to 33,000 megawatt-days per metric ton (MWD/MT). As a result of the irradiation and fissioning of the uranium, the fuel element will contain some plutonium and large amounts of fission products. As the radioactive atoms decay, they produce radiation and decay heat. The amount of radioactivity remaining in the fuel varies according to the length of time after discharge from the reactor. After discharge from the reactor, the fuel elements are placed under water in a storage pool for radioactive decay and cooling prior to being loaded into a cask for transport.

The amount of radioactivity in the spent fuel decreases quite rapidly during the first few days after discharge. After 150 days cooling, however, each irradiated PWR fuel element still contains approximately 2,000,000 curies of radioactivity, of which 5,000 curies is in gaseous form (see Tables 4 and 5). The radioactivity in a BWR element is about half those values.

B. Packaging

Packaging for the shipment of irradiated fuel, called casks, must meet the DOT and AEC regulatory requirements for fissile material packages and for large quantity packages; that is, casks must ensure against nuclear criticality and loss of contents under normal conditions of transport and under accident damage test conditions, provide shielding to reduce the radiation emitted from the cask to specified levels, and dissipate the heat generated in the fuel and cask by radioactive decay. At present, there is only one approved design for a cask which has sufficient length, cavity diameter, shielding, and heat dissipating capacity to be used for transporting the forthcoming generation of irradiated fuel assemblies from nuclear power reactors. Other proposed designs of casks for such fuels which the applicants consider meet the regulations are currently being reviewed by the AEC.

9 0 0 2 9 0 1 2 5

TABLE 4

Radioactivity of Irradiated Fuel[16]
(curies per metric ton of uranium)

	Cooling Period (in days)			
	90	150	365	3650
Fission Products	6.19×10^6	4.39×10^6	2.22×10^6	3.17×10^5
Actinides (Pu, Cm, Am, etc.)	1.42×10^5	1.36×10^5	1.24×10^5	
Total	6.33×10^6	4.53×10^6	2.34×10^6	

TABLE 5

Predominant Fission Products in Gaseous Form[16] Included in Radioactivity of Irradiated Fuel
(curies per metric ton of Uranium)

	Cooling Period (in days)			
	90	150	365	3650
Krypton-85	1.13×10^4	1.12×10^4	1.08×10^4	6.05×10^3
Xenon-131m	1.06×10^2	3.27	1.08×10^{-5}	
Iodine-131	3.81×10^2	2.17	1.98×10^{-8}	

TABLE 6

Thermal Energy in Irradiated Fuel[16]
(watts per metric ton of uranium)

	Cooling Period (in days)			
	90	150	365	3650
Thermal Energy	2.71×10^4	2.01×10^4	1.04×10^4	1.06×10^3

"BEST AVAILABLE COPY"

A truck cask will carry from one to three PWR elements or from two to seven BWR elements. Such a cask will be cylindrical in shape, approximately 1.5 m in diameter and 5 m long, and will will weigh up to 35 MT. A rail cask will carry up to 7 PWR elements or 18 BWR elements. The rail casks, also cylindrical in shape, will be only a little larger than truck casks but may weigh 70 to 100 MT (see Figures 4, 5, and 6). Neutron absorbers in multiple element casks may be necessary to assure nuclear criticality safety.

Radiation shielding is provided in the cask walls. Thick steel, lead, or uranium, which accounts for most of the cask weight, is used to attenuate gamma radiation from the fission products. Hydrogeneous material such as wood or water is used to absorb the neutron radiation from the spontaneous fission and alpha-neutron reactions with oxygen in the fuel due to Cm-242 and Cm-244 present in significant quantities in fuel which has been irradiated to more than about 20,000 MWD/MT.

The cask also must provide the means to dissipate the heat produced by radioactive decay. Water is usually used in the central cavity as a heat transfer medium or primary coolant to transfer the decay heat from the fuel elements to the body of the cask. The heat is usually dissipated to the air through fins on the surface of the cask container by natural processes. For some of the larger casks, air is forced over the fins by blowers to increase the cooling. In one design, heat exchangers using a secondary coolant with cooling coils running into the body of the cask literally pump the heat out and into the atmosphere; the primary coolant is not brought outside of the cask cavity. Reliable redundant systems are used where mechanical systems are relied on to assure cooling for safety.

Spent fuel shipping casks are designed to withstand severe transportation accidents without significant loss of contents or increase in external radiation levels. The casks are protected from the damaging effects of impact, puncture, and fire by thick outer plates, protective crash frames, or other protective overpacks, or are otherwise designed to control damage. The cavity is usually protected from excessive pressure by a rupture disk or a pressure relief valve.

C. Transport Conditions

At present, all shipments of irradiated fuel are made exclusive use, by truck or rail. Some barge shipments may be made in the future. It is unlikely that such shipments will be shipped in general freight as less-than-truckload or less-than-carload lots.

ORNL DWG 68-12260

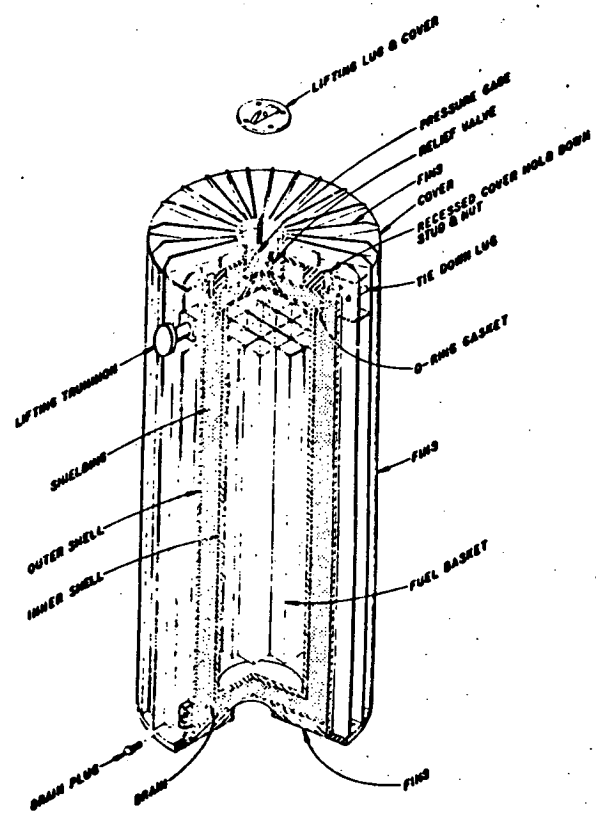

FIGURE 4 Cutaway Diagram of a Shipping Cask Showing the Principal Components.

9 0 0 2 9 0 1 2 6

Approximate:

Length	5.3 meters
Diameter	1.6 meter
Weight	
empty	55 tons
loaded	67 tons

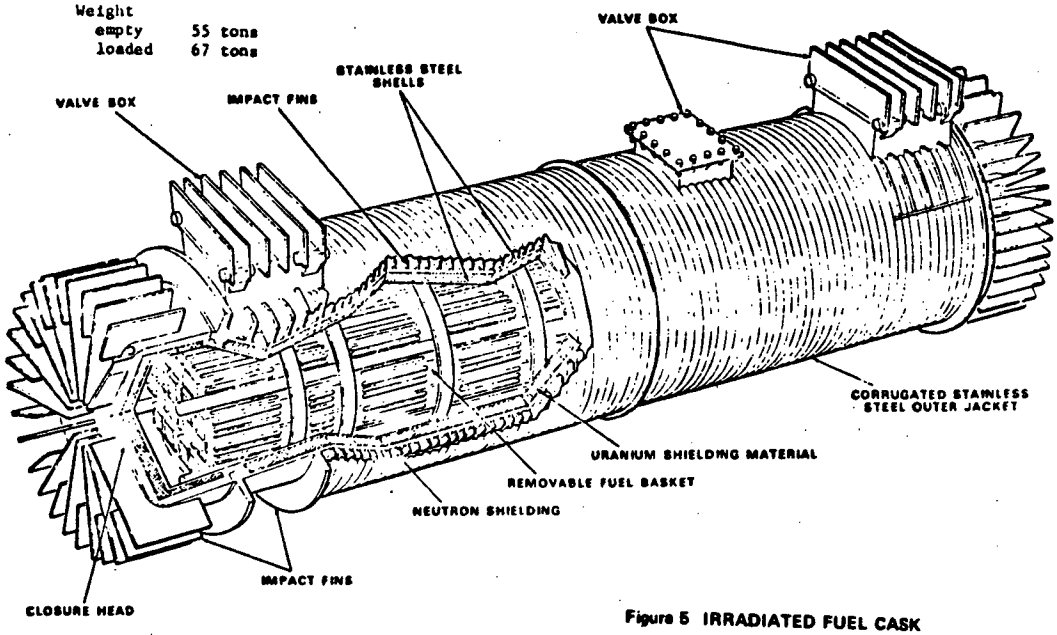

Figure 5 IRRADIATED FUEL CASK

"BEST AVAILABLE COPY"

Approximate weight of cask and shipping assembly:

empty	70 tons
loaded	82 tons

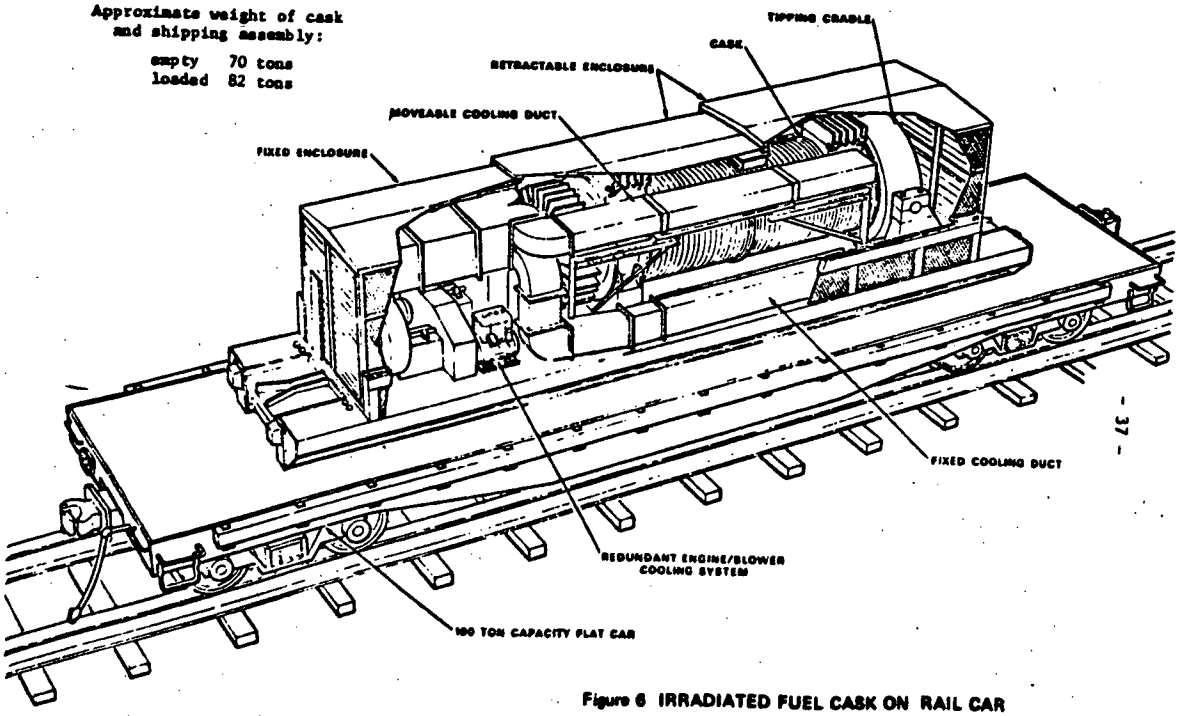

Figure 6 IRRADIATED FUEL CASK ON RAIL CAR

90029 0127

"BEST AVAILABLE COPY"

The estimated average distance from the nuclear power plant site to the fuel reprocessing plant over which the irradiated fuel would be transported is 1000 miles. This journey would require an average transit time of about 3 days by truck and about 8 days by rail. Barge shipments might require 10 or 15 days, depending on the route.

Shipments by motor freight of spent fuel may be made from all reactor sites to all reprocessing sites. Many nuclear power plants do not have rail service directly onto the plant site. For this reason, those plants are either restricted to highway shipments using the lighter weight casks or must rely upon intermediate trucking by special equipment to the nearest railhead. Only a few of the nuclear power facilities are located on navigable waterways. Also, only one fuel reprocessing plant currently operating or planned will have the capacity of receiving shipments by water.

If barge transport of casks is to be used, construction of docking facilities might be required, at a cost of from $25,000 to $1,000,000.[17] Because of the probable high cost, docking facilities are unlikely to be built only for the purpose of shipping irradiated fuel elements. If docks are required for other purposes, they may be used for the transportation of irradiated fuel.

There are no plans at present to ship irradiated fuel elements by air. The possibility of air shipment is under study in the airlines industry to determine if the economics and safety aspects are acceptable. In all cases, air shipments will require truck movement from the nuclear power plant site to the airport and from the airport to the fuel reprocessing plant site.

D. Effects on the Environment

Normal Conditions

1. Heat

The rate of release of heat to the air from each cask will be about 10 to 70 kilowatts or from about 35,000 to 250,000 Btu/hr, depending on the type and amount of irradiated fuel contained. This might be compared to the rate at which waste heat is released from a 100 horsepower truck engine operating at full power, which is about 50 kilowatts or 130,000 Btu/hr. The temperature of the air which contacts the loaded cask will be increased a few degrees but the temperature of the air a few feet from the cask would remain unaffected. The longest period of time that one

would expect the loaded cask to be present at a particular location, other than at the nuclear power plant site or the fuel reprocessing plant site, would be about eight hours, e.g., during the driver rest periods at truck stops or terminals and in rail yards awaiting makeup of trains. Because the amount of heat is small and is being released over the entire transportation route, no appreciable effect on the environment will result.

The DOT regulations[9] limit the temperature at any accessible surface of the cask to not more than 180°F at any time during transport, including stopover points. Although this temperature is not high enough to present a fire hazard, it could cause burns if contacted by bare skin. Since access to the cask is controlled to a large extent and each package is labeled with a "Radioactive" warning label, the likelihood of people becoming burned in this manner is quite low. There have been no known cases of such burns from those shipments which have been made with surface temperatures near the 180°F limit.

2. Weight and Traffic Density

Shipping the irradiated fuel from a single refueling of the reactor to the fuel recovery plant will require an average of 60 truck shipments, 10 rail car shipments, or 5 barge shipments. The casks are returned empty to the reactor. The weight of the spent fuel in a loaded cask constitutes only 2 or 3% of the total weight of the loaded cask. Because the cask being returned empty weighs almost as much as the cask loaded with irradiated fuel, the weight and number of shipments of empty casks must be considered in assessing the impact on the environment of the shipment of irradiated fuel. Therefore, considering return shipments of the cask, shipping the irradiated fuel will involve a total of 120 truck movements, 20 rail car movements, or 10 barge movements each year.

The total number of such shipments is too small to have any measurable effect on the environment due to the resultant increase in traffic density.

State highway weight restrictions limit the gross weight of trucks for routine shipments so that the gross weight of casks is limited to about 25 tons. Shipments of casks weighing up to about 35 tons may be allowed in most States under a special overweight permit. The States often prescribe special routing for overweight shipments and in some cases restrict the period during which the truck can travel. Repetitive shipments of overweight

9 0 0 2 9 0 1 2 8

"BEST AVAILABLE COPY"

loads may cause breakup of the roadway. Some irradiated fuel shipping casks may require overweight permits. The number of such shipments is limited to about 60 round trips per year per reactor. That number of overweight shipments would not be expected to have any adverse effect on the roadways. Rail shipments of 50 to 100 tons of other commodities, such as coal, are routinely handled so the rail shipment of a 70-ton cask would offer no unusual loadings of rail facilities. Barges routinely transport cargoes weighing more than 100 tons.

3. Radiation

a. Regulatory Limitations

The radiation level at the surface of packages of radioactive material is limited by the DOT regulations[6] to no more than 200 mrem/hr, and at 3 feet from the surface to no more than 10 mrem/hr. If the shipment is made in a closed truck or rail car, the radiation level at 3 feet from the surface of the cask may be as high as 1,000 mrem/hr, provided that the radiation level does not exceed 200 mrem/hr at the surface of the vehicle, 10 mrem/hr at 6 feet from the surface of the vehicle, and 2 mrem/hr in either the driver's compartment or in a normally occupied position in a rail car.

Because of the large size of the packages used for shipping irradiated fuel, the limiting factor will be the radiation level at either 3 feet from the surface of the package, or six feet from the vehicle. Therefore, the radiation levels at the package surface will be considerably below those allowed by the regulation.

Based on actual experience, radiation levels around some irradiated fuel casks may exceed 200 mrem/hr at the surface of the cask, but will meet the limitations of 1,000 mrem/hr for closed vehicle shipments. In order to meet the limitation of 10 mrem/hr at 6 feet from the vehicle surface, the level will rarely exceed about 50 or 60 mrem/hr at the vehicle surface, or 25 mrem/hr at 3 feet from the truck or rail car.

Although a radiation level of 2 mrem/hr is permitted in a truck cab, the level based on actual experience is unlikely to exceed 0.2 mrem/hr, owing to the distance from the cask and shielding provided by intervening material.

b. Radiation Exposures

(1) Truck Drivers. Two truck drivers during a 1000 mile trip will probably spend no more than 20 hours in the cab

and about 1 hour outside the truck at an average distance of 3 feet from the cargo compartment. Under those conditions, each truck driver could receive about 30 mrem from an irradiated fuel shipment. Actual experience indicates that average exposures are much less than 30 mrem/trip; in most cases, less than 10 mrem/trip. The same driver is unlikely to be used for more than 30 shipments per year, in which case he would receive about 300 mrem in a year based on 10 mrem/trip. Based on 10 mrem/trip/driver, the cumulative annual dose to all drivers for 60 trips with 2 drivers on each trip would be 1.2 man-rem.

(2) Garagemen and Brakemen. For truck shipments, normal servicing of the truck will probably require two garagemen to spend about 10 minutes around the cab of the truck. Each could be exposed to about 0.02 millirem. The cumulative annual dose to all garagemen for 60 shipments would be about 0.002 man-rem.

For rail shipments, train brakemen would be expected to spend from 1 minute to 10 minutes each in the vicinity of the car during the trip, for an average exposure of about 0.5 mrem per shipment. With 10 different brakemen involved along the route, the cumulative dose for 10 shipments during the year is estimated to average about 0.05 man-rem.

(3) Freight Handlers. Irradiated fuel shipments are transported as full loads. Since the casks are not handled enroute, under normal conditions there would be no routine exposure of the carrier's freight handlers, either by truck or rail.

In-transit storage of these casks is unlikely except while mounted on the vehicle (truck or rail) at truck stopover points, in terminal yards, or in railroad switchyards. There will be little, if any, across-the-dock handling of these casks outside of the nuclear power plant and the fuel recovery plant sites.

There is little likelihood that carrier personnel or members of the general public will get close to the side of the vehicle except in the case of transshipment, e.g., when the cask is transported by truck from the reactor to a nearby railhead and transferred from the truck to a railroad car.

All such handling must be done with cranes and heavy lifting equipment so that the exposure of persons occurs only during untying and tying down and hooking and unhooking

9 0 0 2 9 0 1 2 9

"BEST AVAILABLE COPY"

lifting hooks. This might require 1/2 hour exposure at an average distance of 3 feet from the cask or about 100 mrem exposure for each of two persons handling the cask. If there were ten shipments to the railhead handled in this fashion, the cumulative annual dose would be about 2 man-rem. The crane operator and other workers in the area would be unlikely to receive any significant exposure.

In hauling the shipment to the railhead by truck, a distance of perhaps 20 miles, two truck drivers might spend an hour in the cab and perhaps 15 minutes outside the truck at an average distance of 3 feet from the cask. Assuming the radiation level in the cab is 2 mrem/hr and the level at 3 feet from the cask is 100 mrem/hr, each truck driver might receive as much as 30 mrem during each shipment. If the same two truck drivers were used for all ten shipments, each could receive as much as 300 mrem. The cumulative annual dose to all drivers would be about 0.6 man-rem.

(4) Barge Operators. A barge operator or tugboat operator who picks up the loaded barge at the nuclear power plant site will probably spend no more than an hour lashing the barge down, and checking lights and equipment at a distance of 50 feet from the cask, and perhaps a total of 10 minutes within 3 feet of the cask during the entire trip. His total dose would be about 4 mrem per trip. If two operators were involved, this would be a cumulative annual dose of about 0.04 man-rem for the five barge shipments.

(5) General Public--Onlookers. Members of the general public are normally excluded from loading and unloading operations, but some exposures might occur at enroute truck stops for fuel and eating and at railroad stations. Railroad cars carrying irradiated fuel shipments are placarded on both sides and trucks on both sides and the front and rear as "Radioactive." A member of the general public who spends 3 minutes at an average distance of 3 feet from the truck or railcar, might receive a dose of as much as 1.3 mrem. If ten persons, on the average, were so exposed during each shipment, the cumulative annual dose to such onlookers for the 60 shipments by the truck would be about 0.8 man-rem and for the 10 shipments by rail, about 0.1 man-rem.

Because of the conditions under which barges travel, onlookers are unlikely to be in a location where they would receive any significant exposure from barge shipments of irradiated fuel.

(6) General Public--along the route. Approximately 300,000 persons who reside along the 1000 mile route over which the irradiated fuel is transported might receive a cumulative dose of about 1 man-rem per year if the irradiated fuel is transported by truck and about 0.2 man-rem if transported by rail. An estimated 100,000 persons along the route might receive about 0.03 man-rem if transported by barge. In this case, the regulatory radiation level limit of 10 mr/hr at 6 feet from the vehicle was used to calculate the integrated dose to persons in an area between 100 feet and 1/2 mile on both sides of the shipping route. It was assumed the shipment would travel 200 miles per day and the population density would average 330 persons per square mile along the route, except that for barge, it is estimated that persons are within 1/2 mile of the barge route over only about 1/3 of that route. See Appendix D for the detailed calculations.

(7) Animals. The exposure of domestic animals or pets during transit is unlikely since the irradiated fuel is transported exclusive use.

(8) Film. Unexposed photographic film is not likely to receive any exposure during transit of irradiated fuel since, in most cases, there is no other freight loaded on the car or truck because of the weight and nature of the cask.

It is possible that a car or truck containing unexposed film could be parked adjacent to a truck or car containing irradiated fuel for several hours. The likelihood of this occurrence is so low that it is not practical to calculate it.

Accident Conditions

1. In-Plant Accidents

The "in-plant" radiological aspects of transportation of radioactive material are evaluated separately as part of the

0 1 3 0 9 0 0 2 9

licensing procedures or contractual requirements and are not evaluated against the packaging standards and criteria for transportation. For that reason, the "in-plant" aspects have not been included in this analysis.

2. Off-Site Accidents

A cask must be so designed that in the unlikely event a shipment of irradiated fuel is involved in an accident, it is unlikely that there would be any release of radioactive material or increase in radiation levels outside of the package and under even the most severe accident conditions, releases above levels specified in the regulations are very unlikely. Although the consequences of a major release from an irradiated fuel cask could be severe, the low probability of such occurrences makes the risk from such accidents small.

a. Leakage of Coolant Under Other than Accident Conditions

The likelihood of leakage of coolant from a cask, under other than accident conditions, is very small because of the rugged, leaktight design of the cask and the procedures the shipper is required to follow to ensure leaktightness when preparing the cask for shipment.

The consequences of a leak depend on the amount of radioactive material which could be released by an undiscovered leak. A cask is required to be held at the origin until certain checks have been made including pressure, temperature, and checks for leakage. Any major leak would be discovered at the origin and corrected. If too much coolant were lost, it could cause overheating.

According to information supplied by the N-14 Committee of The American National Standards Institute, leakage of liquid at a rate of 0.001 cc/sec or about 80 drops an hour is about the smallest that can be detected by visual observation of a large container. It is expected that leakage at a rate exceeding 0.001 cc/sec would moisten a large enough area to be visible or would drip and probably would be detected and corrected at the reactor site. A leakage rate of .001 cc/sec on a large heated cask is expected to be evaporated as rapidly as it leaks out. Some fraction (perhaps 1%) of the radioactivity in the released liquid might be dispersed in the form of an aerosol. The exposure to people from such releases would be extremely small.

"BEST AVAILABLE COPY"

The AEC regulations limit[18] the contamination level in the coolant under normal conditions to 10^{-7} curies/cc of Group I (plutonium), 5×10^{-6} curies/cc for Group II (strontium and mixed fission products), and 3×10^{-4} curies/cc for Groups III and IV radionuclides (cesium and uranium). Based on 0.25% of the rods being perforated, we estimate about 1 μCi/cc of gross fission product activity might be in the cask coolant. Experience reported by Savannah River processing plant[19] indicates that the activity in water-filled casks ranges from 10^{-5} to 1 μCi/cc and that the activity is primarily cesium-137.

In 5 days, an undetected leak of 0.001 cc/sec would release 430 cc or about 400 μCi of activity. Under most conditions, that contamination would be retained on the surface of the cask and bed of the truck or railroad car.

b. Accident Conditions.

If transported by truck, it is estimated that a loaded cask would be involved in an accident about once in 20 reactor years and if transported by rail or barge, about once in 170 reactor years (see Appendix A).

Each cask is so designed and constructed that the probability is low of a cask being breached in the unlikely event it is involved in an accident. The form of the nuclear fuel is such that, should a breach occur, releases of radioactivity are unlikely and those releases that would occur are likely to be limited to gases and liquid coolant present in the cavity. The uranium, actinides, and most of the fission products would remain tightly bound in the oxide pellets. Some of the gases and most of the volatile and semivolatile actinides and fission products released from the oxide pellets would be retained by the cladding in the void spaces of the fuel rods.

The total amounts of the important gases, actinides, and gross fission products in low-enrichment fuel which has been cooled 150 days after irradiation at a power level of 30 MW/MT for a total of 33,000 MWD/MT are listed in Tables 4 and 5. The important activities in the void spaces of the fuel rods are shown in Table 7.

90029 01310

"BEST AVAILABLE COPY"

TABLE 7

FUEL ROD VOID SPACE ACTIVITY

Type of Radioactive Material	Total Inventory[16] 150 days cooling curies/metric ton	% in void spaces of fuel rods*	Activity in void spaces curies/metric ton
Kr-85	1.12×10^4	30	3.4×10^3
I-131	2.17	2	4.3×10^{-2}
Other fission products	4.38×10^6	0.01**	400
Actinides, (Pu, Am, Cm)	1.36×10^5	essentially none	neg.***
Xe-131m	3.27	2	0.1***
I-129	2×10^{-3}[20]	30	6×10^{-4}***
H-3	6.92×10^2	1	7***

* Realistic gap activities in terms of percent of total inventory prepared by AEC's Directorate of Licensing based on references 20 through 32.

** A conservative (high) value estimated on the basis of leaching the outer 1.2×10^{-5} inches from the surface of the uranium oxide fuel.

*** Due to the small amounts present, the dose contribution from Xe, I-129, H-3, and the actinides may be neglected compared to the doses from the other radionuclides.

The amount of radioactivity released relates to the number of fuel rods which are perforated. Penetration of the cladding would release some of the gases and gross fission products from the void spaces into the cask cavity and coolant. In the absence of a severe impact, it is believed conservative to assume that 0.25% of the fuel rods may be perforated. Even if all of the rods were ruptured, the radioactivity released would be unlikely to exceed 1.1×10^4 Ci of Kr-85, 0.1 Ci of I-131 and 1.3×10^2 Ci of other volatile and soluble fission products. Because of the cask design and quality control, the nature, form and physical properties of the fuel assemblies, the probability of such a release is so small as to be practically incredible.

c. Extended Fire.

Involvement of a cask in a fire lasting as long as 4 or more hours could cause loss of some neutron shielding and, if lead is used, loss of some gamma shielding. Releases of radioactive materials could be as much as those estimated above. The probability of an accident occurring in which such a long fire results is very small and the probability of a cask being involved in such an accident is so small as to be practically incredible.

d. Submersion in water.

If a cask is accidentally dropped into water during transport, it is unlikely to be adversely affected unless the water is deep. Most fuel is loaded into casks underwater, so immersion would have no immediate effects. The water would remove the heat so overheating would not occur. Each cask is required by § 71.32(b) to be designed to withstand an external pressure equal to the water pressure at a depth of 15 meters, and most designs will withstand external pressure much greater than that. If a cask were to collapse due to excessive pressure in deep water, only the small amount of radioactivity in the cask coolant and gases from perforated elements in the cask cavity are likely to be released. The direct radiation would be shielded by the water. About 10 meters of water, which is the depth of most storage pools, would be ample shielding for radiation from exposed fuel elements.

From our evaluation, the sinking of a cask in deep water would not result in serious radiological consequences. The most likely mechanism for loss of containment from external water

9002960132

"BEST AVAILABLE COPY"

pressure would be through failure of the pressure relief valves. This would result in an inflow of water and subsequent release of some of the contaminated coolant and radioactive gases present in the cask cavity. If all of the coolant and gases were released, the total activity might be on the order of 300 curies, most of which would be krypton-85 gas. The vast quantities of water available at the depth at which such a failure might occur would provide sufficient dilution so that it is unlikely there would be any significant radiation exposure or environmental impact.

The fuel elements, which contain most of the radioactive material, provide excellent containment. In an operating reactor, the fuel elements are under water at elevated temperatures and pressures on the order of 1000 to 2000 pounds per square inch guage. Thus exposure to water pressures at depths of 600 to 1200 meters should have no substantial effect on the fuel elements themselves.

Except under very unusual circumstances in which the cask could not be located or was submerged in extreme depths, the cask probably could be recovered with normal salvage equipment. If the cask and elements were not recovered, there would be a gradual release of radioactive material over a long period of time, several hundred years. Considering the extremely low probability of occurrence, the major reduction in radioactivity due to radioactive decay, and the dilution that would be available, there would be no significant environmental impact from this gradual diffusion of the radioactive fuel.

Accident Risk

Considering the low probability of a shipment of irradiated fuel being involved in an accident, the requirements for package design and quality assurance, the nature and form of the irradiated fuel, and the controls exercised over the shipment during transport, it is concluded that the radiation risk to the environment from irradiated fuel in transportation accidents is small.

90029 0133

VI. DETAILED ANALYSIS OF THE ENVIRONMENTAL IMPACT OF TRANSPORTING SOLID RADIOACTIVE WASTE FROM A TYPICAL LIGHT-WATER NUCLEAR REACTOR IN ACCORDANCE WITH PRESENT REGULATORY STANDARDS AND REQUIREMENTS

A. Characteristics

Solid waste, primarily sludges and resins, is estimated to amount to about 3,800 cubic feet per year from a BWR (see Table 8). Of this amount, 120 cubic feet of cleanup sludge per year will contain 13 curies per cubic foot and require Type B packaging. The remaining 3,680 cubic feet will contain about 0.09 curies per cubic foot and can be shipped as low specific activity materials, or in Type A packaging. Solid waste from a PWR is similar in form but the total is about 1,000 cubic feet per year, about 24% of which will be resins containing 0.6 curies per cubic foot, 75% sludges containing 0.01 curies per cubic foot, and 1% resins and sludges containing up to 15 curies per cubic foot.

TABLE 8

SOLID WASTE FROM 1100 MWe BWR

	Volume[33] (ft^3/yr)	Radio-[33] activity (Ci/ft^3)	No. of* Drums @ 7.2 ft^3/drum	Ci/drum
Cleanup Sludge	120	13	67	23.3
Condensate sludge	2100	0.14	1166	0.25
Waste sludge	920	0.01	511	.02
Waste bead resin	60	0.01	34	.02
Cond. bead resin	600	0.06	334	0.01
Totals	3800 ft^3/yr		2112	

* Assuming the waste is mixed with concrete in the ratio of 1.8 ft^3 of waste and 5.4 ft^3 of concrete per 7.2 ft^3 (55-gallon) drum.

In addition, soft solid wastes such as contaminated clothing, rags, paper, gloves, and shoe coverings containing low levels of contamination will be generated. This low level waste, probably compacted to reduce the volume, may be shipped in 55-gallon drums. Each year, on the average, one might expect 30 to 50 drums (one truckload or a part of one carload), each drum containing 500 pounds of compacted material contaminated with 0.5 curies of corrosion, activation, and fission products, to be shipped for disposal.

"BEST AVAILABLE COPY"

B. Packaging

Under the regulations of the DOT, solid wastes may be shipped in strong industrial, Type A, or Type B packages depending on the amount of radioactivity. Typically, the waste is compacted, or solidified in a mixture of vermiculite and cement in steel drums. The drums when filled weigh from 500 to 800 pounds with an average weight of 700 pounds. The drums are normally made of 18-gauge steel with 16-gauge "clamp-on" lids. Wastes which are low specific activity materials, or Type A quantities in drums, may be shipped without further packaging. Type B quantities must be shipped in Type B packages; these might be drums in an "overpack" (i.e., a protective outer container) which provides impact and thermal protection for the drum or shielded flasks designed to meet Type B requirements.

C. Transport Conditions

About 2,100 drums weighing an average of 700 pounds each would be required to ship the solid waste to the burial grounds. The waste is shipped either by truck with 40 to 50 drums per truckload, or by rail with 200 to 250 drums per car. This will involve 46 truckloads or 11 carloads per year. Barge and air shipments are unlikely.

All shipments will likely be made under exclusive use--full load--arrangements. Such shipments will be transported an average distance of 500 miles (a minimum distance of 50 miles to a maximum of 3,000 miles). The average transit time will be about 3 days by truck and 7 days by rail.

D. Effects on the Environment

Normal Conditions

1. Heat. Most of the packages of waste would have no readily detectable heat output. Those containing the cleanup sludges might generate about 0.1 watt or 0.4 Btu/hr of heat per package which is negligible as far as effect on the environment is concerned.

2. Weight and Traffic Density. The number of shipments per year, about 46 by truck or 11 by rail, is too small to have any measurable effect on the environment due to the resultant increase in traffic density.

9 0 0 2 9 0 1 3 4

The number of drums of waste per vehicle can be adjusted so that the truck can stay within the weight restrictions of the State (usually about 25 tons) or the rail car can meet the railroad limitations on gross car weight. There should be no need for overweight permits, and therefore no excessive loads on the roadbeds or bridges for major routes.

3. Radiation

a. Regulatory Limitations. Drums of wastes must meet the regulatory limitations on external radiation levels described in the previous section on Regulatory Standards. In practice, most of the drums will contain such small quantities of radioactivity that the radiation levels at the surface of the drums will be less than 200 mr/hr.[33] Radiation levels at the edge of the load, which is the surface of the truck or rail car, are unlikely to exceed 50 to 60 mrem/hr; at 3 feet from the surface of the vehicle, 25 mrem/hr; and at 6 feet from the surface of the vehicle, 10 mrem/hr. The radiation level in the truck cab is not likely to exceed 0.2 mrem/hr.

b. Radiation Exposures

(1) Truck Drivers. Two truck drivers during a 500 mile trip would probably spend no more than 20 hours in the cab and about 1 hour outside the truck at an average distance of 3 feet from the cargo. Under those conditions, each truck driver could receive about 30 mrem from a solid waste shipment. Actual experience indicates that average exposures are much less than 30 mrem; in most cases, less than 10 mrem/trip. The same driver is unlikely to be used for more than 30 trips each year, in which case he would receive about 300 mrem in a year based on 10 mrem/trip. The cumulative annual dose to all drivers might be about 1 man-rem.

Discussions with companies who ship or carry packages almost daily revealed[34] that the exposures of drivers and handlers who were routinely monitored were very low, many showing no exposure above background, even when such persons are assigned the regular job of transporting radioactive materials.

"BEST AVAILABLE COPY"

(2) Freight Handlers. Shipments of wastes are transported as "full-loads." Since the drums are not handled enroute, there would be no exposure of the carrier's freight handlers, either by truck or rail.

(3) Garagemen. For truck shipments, normal servicing of the truck would probably require two garagemen to spend no more than 10 minutes around the cab of the truck. Each would be exposed to about 0.02 millirem. The cumulative annual dose to garagemen for 46 shipments would be about 0.002 man-rem.

(4) Brakemen. For rail shipments, train brakemen would probably spend from 1 minute to 10 minutes each in the vicinity of the carload of drums of waste during the trip, for an average exposure of about 0.5 mrem per shipment. If 10 different brakemen were involved along the route, the cumulative annual dose would be about 0.05 man-rem for the 11 shipments.

(5) General Public -- Onlookers. Members of the general public might be exposed to radiation from shipments of waste at enroute truck stops for fuel or eating or at railroad stations. Car loads of solid waste shipments will be placarded on both sides and truckloads on both sides and the front and rear as "Radioactive." A member of the general public who spends 3 minutes at an average distance of 3 feet from a loaded truck or car might receive a dose of as much as 1.3 mrem. If 10 people were so exposed during a shipment the cumulative annual dose to such onlookers for the 46 shipments by truck would be about 0.6 man-rem, and for the 11 shipments by rail, about 0.1 man-rem.

(6) General Public -- Along the Shipping Route. An estimated 150,000 persons who reside along the 500 mile route over which the solid waste is transported might receive a cumulative dose of about 0.4 man-rem per year if the waste were transported by truck and about 0.1 man-rem if transported by rail. These doses were calculated for persons in an area between 100 feet and 1/2 mile on either side of the shipping route, assuming 330 persons per square mile, 10 mr/hr at 6 feet from the vehicle and each shipment traveling 200 miles per day. See Appendix D for the detailed calculations.

9 0 0 2 9 0 1 3 5

(7) Animals. The exposure of domestic animals or pets during transit is unlikely since the waste is transported as a "full-load."

(8) Film. Unexposed film is unlikely to be loaded on the same vehicle as a load of waste, and hence is unlikely to receive any radiation exposure. It is possible that a car or truck containing film could be parked adjacent to the carload or truckload of waste for several hours. The likelihood of this occurrence is so low that it is not practical to calculate it.

Accident Conditions

1. In-Plant Accidents

The "in-plant" radiological aspects of transportation of radioactive material are evaluated separately as part of the licensing procedures or contractual requirements and are not evaluated against the packaging standards and criteria for transportation. For that reason, the "in-plant" aspects have not been included in this analysis.

2. Off-Site Accidents

The likelihood of leakage of radioactive material from a package of solid waste is small because of the solid form of the material and the leaktight design of the containers. Both the solid form of the material and the small amount of radioactivity per unit mass limit the adverse effect in the unlikely event a release should occur.

a. Improperly Closed Packages

In the shipment of a large number of packages of solid wastes, it is possible that some of the drums or packages may not be properly closed as a result of human error. It is estimated that about one in 10,000 packages may not be properly closed when shipped. In the unlikely event that an improperly closed package comes open, the solid form of the material, either as compacted soft wastes or consolidated solid wastes, makes it highly unlikely that other than a small release of radioactivity will take place. No significant radiation exposures would be likely to result. However, cleanup costs might amount to a few thousand dollars.

"BEST AVAILABLE COPY"

b. Accident Conditions

A truckload of solid waste may be involved in an accident about once in 25 reactor years and a rail carload about once in 250 reactor years (see Appendix A).

The packages used for the waste are so designed and constructed and the solid form in which the waste is shipped is such that, in the unlikely event a shipment of solid waste is involved in an accident, it is unlikely that the radioactive material would be released. Based on the results of an instrumented test[35] in which a semitrailer truck loaded with drums was crashed into an immovable barrier at 42 miles per hour, it is highly unlikely that more than 50% of the Type A packages or any of the Type B packages would be damaged in an accident. Most of the radioactivity is tightly bound in the waste and most of the waste is in a massive, solid form. Unless fire ensues, the amount of radioactivity which becomes airborne in the unlikely event a drum or package were to be broken open is unlikely to exceed a very small fraction (less than 0.1%) of the activity of the contents of that drum. In a fire, combustible wastes may be burned but most of the radioactivity in waste burned in a fire will remain in the ashes.

Soft solid wastes such as paper, contaminated clothing, etc., compacted and placed in drums are typical Type A packages of solid waste. Each may contain as much as 1 curie of activation and fission products, primarily Fe-59 and Cs-137 distributed throughout about 500 pounds of waste.

In the case of the consolidated solid wastes, e.g., concreted resins, sludges, etc., as much as 100 curies of activation and fission products may be contained in 700 pounds of waste and concrete in a 55-gallon drum or in concrete- or metal-shielded flasks. Because of the form of the waste, it is extremely unlikely that the contents would be released in any accident.

The amounts of radioactivity contained in each drum of waste are small in most cases. Based on the data presented earlier, about 3 percent of the drums of waste would contain compacted wastes with very low levels (millicurie amounts) of contamination and 95 percent would contain solid wastes with a total radioactive content averaging less than 0.3 curie per drum. In the unlikely event such packages are broken open in an

accident, the consequences of a release would be very limited. Only about 2 percent of the drums or packages of waste would contain curie quantities of radioactive material and they would be required to be Type B packages, i.e., so designed that they would be unlikely to release their contents in an accident. Even if the entire contents were released, the solid form would limit the amount dispersed to a small fraction of the total activity.

Accident Risk

The probability of a shipment of solid radioactive waste being involved in an accident is very small. Because of the package design, quality assurance, and nature and form of the waste, a release is unlikely in an accident. In the event a release occurs, the small amount of radioactivity in most packages of waste and the fact that the radioactive material is tightly bound in a massive solid makes it highly unlikely that any serious radiation exposures would occur. Therefore, the radiation risk to the environment from solid radioactive waste in transportation accidents is small.

9 0 0 2 9 0 1 3 6

"BEST AVAILABLE COPY"

VII. POSSIBLE ALTERNATIVES AND ADDITIONS TO THE TRANSPORTATION METHODS ANALYZED AND COST-BENEFIT ANALYSIS

Under normal conditions there are no effects on the environment which would be considered adverse, and although the consequences of credible accidents are serious, the probability is so small that the overall risk is not sufficient to justify any significant effort to further reduce the consequences.

The following alternatives and actions were examined:

A. Routing

The probable routing of shipments of unirradiated and irradiated nuclear fuel and solid radwastes is indicated in some Environmental Reports for individual nuclear power plants. It is not intended that the shipments be restricted to these routes since the safety standards of the AEC and DOT do not rely on restriction of routing for assuring safety in transport.

The regulations of the States impose controls on weights of loads on roadways and bridges. Also, in some cases municipalities and bridge, tunnel, and turnpike authorities place restrictions on travel at specific periods of the day or night and over certain sections of routes. These latter limitations may affect the choice of routes.

Routes for shipping radioactive material could be required to be selected so as to avoid centers of population, special risk areas due to local road or rail conditions, areas of high accident frequency, extremes in ambient conditions such as very cold or very hot weather, high elevations, and delays. Such restrictions could reduce the probability of an accident occurring in many cases. However, if the shipping distances were increased to avoid the conditions, the accident frequency could be increased. Examination of local conditions would be required in each case to determine whether such restrictions would be advantageous or not.

Requiring radioactive material shipments to be shipped over routes which avoid centers of population would reduce the radiological consequences of those accidents in which a release of radioactivity is involved or direct radiation exposure of persons in the area results. This follows, since the dose would be smaller if the number of people in the affected area were

smaller. The risk from accidents, however, involves both frequency and consequences. If the number of miles traveled is increased by the special routing restriction, the frequency of accidents will be increased unless the probability of an accident is smaller for the "special route," since the number of accidents is proportional to the number of miles traveled. Also, the risk from accidents due to common causes far overshadows the risk due to radiological effects. In truck accidents, for instance, non-fatal injuries occur in 33% of all truck accidents and fatal injuries in 3% of all truck accidents,[36] whereas the radiological effects occur in only a very small fraction of all accidents. Experience[37,38] and the statistics analyzed in this report show the probability of an accident occurring which causes any radiological effects is extremely small. Special routing to avoid centers of population to reduce the radiological effects, which are already small, can be expected to have only a very small effect. Therefore, any reduction in the already very small risk from radiological effects may be outweighed by an increase in the risk from common causes.

At present, truckers carrying hazardous goods are required by DOT regulations[39] to avoid congested places insofar as is practicable. Truck routes usually are chosen to move traffic along and for that reason usually avoid congested areas. Carriers use Interstate highways whenever possible. Interstate highways avoid centers of population in most cases. Although the use of divided highways and routes around population centers may reduce the probability of an accident occurring per mile, the severity of those accidents which do occur will be increased because of the higher rate of speed of the vehicle.

There are no specific regulatory requirements with regard to routing of hazardous materials shipments by rail. Severe rail accidents involve high speeds and frequently occur because of faulty roadbeds or equipment. Roadbeds connecting centers of population are used more frequently than off-the-main-line roadbeds and generally are better maintained for that reason. Further, accidents occurring inside city limits are unlikely to be as severe as those outside the city limits since speeds are restricted somewhat, and emergency equipment is more readily available. For these reasons, it appears likely that for rail shipment, the frequency of severe accidents may be greater for shipments made on routes chosen to avoid centers of population than if those same shipments were made on "main line routes" between population centers.

90029 0137

"BEST AVAILABLE COPY"

B. Escorts

Escorts, in separate vehicles or cars, could be required to accompany the shipments. They could be equipped to monitor the area and take corrective action in case of an accident. Escorts who survive could assist in control of any accident, but probably could not reduce the effects of immediate releases such as releases of noble gases and iodine. It does not appear likely that a requirement that escorts accompany a shipment can be justified in view of the low probability of a severe accident occurring in which an escort would be effective.

To be effective, escorts would have to be provided for each major shipment of radioactive material. Although an escort in a separate vehicle might mitigate the consequences of some accidents and reduce the already small probability of the shipment vehicle being involved in an accident, the escort vehicle has a probability of being involved in an accident at least equal to that of the shipment vehicle. Because injuries occur in 13% of all motor vehicle accidents, the increased number of injuries due to accidents involving the escort vehicle outweighs the small probability that escorts could reduce the consequences of the severe accident, less than 0.5% of all accidents.

C. Longer Storage of Spent Fuel

The amount of radioactivity and decay heat in the irradiated fuel can be reduced by holding the irradiated fuel in the storage pool at the reactor for long periods of time.

For purposes of shipment, the radioactive decay that takes place in irradiated fuel during the first 90 days after removal from the reactor is considered important. During that time most of the iodines decay to small values, the noble gases are reduced, and other short-lived radionuclides decay so that the amount of heat generated is greatly reduced. The difference in radioactivity inventory and decay heat between 90 days and 150 days is not considered to be significant for shipment. Therefore, shipment anytime after 90 days of cooling time is considered to be within the scope of this analysis. Shipment in less than 90 days cooling time would require reexamination of the added risk and potential benefit.

By storing the fuel for a full year instead of 150 days, the radioactivity and decay heat could be reduced by a factor of 2, and storage for 10 years would reduce them by a factor of 10. Storage beyond 150 days gains little in terms of reducing the inventory compared to the required increase in storage capacity for the nuclear power plant, fuel inventory costs, and the additional precautions necessary to assure that the risk is not greater because of the extra fuel on hand. On balance, it does not appear storage beyond 150 days is warranted.

D. Lower Radiation Levels Outside of Packages

It is possible to design and build heavier packaging with additional shielding or, by reducing the amount of radioactive material in a package, to reduce the radiation levels outside of the package. Additional shielding for most container designs would be added to the outside of the present shielding to avoid reducing the capacity of the container. The fractional increase in the weight of the container due to the added shielding would be more than the fractional increase in shielding thickness. The costs increase as the ratio of weight of container to weight of the contents increases. Additional shielding also increases the initial cost of the container.

The weight of present designs of casks is approaching the limits of the available handling and transport facilities. Extra package weight means a smaller number of packages per vehicle, which would mean more shipments. More shipments would be required if the content of present packages were reduced. Increasing the number of shipments increases the frequency of accidents and thereby increases the impact on the environment.

Taking into account the costs associated with additional shielding, weight limitations of available facilities and equipment, and the present state of the technology, the Staff concludes that the radiation levels associated with present designs of casks are as low as practicable.

E. More Stringent Accident Damage Test Criteria

The radiological risk due to accidents involving packages of radioactive material might be reduced by imposing more stringent accident damage test criteria on package designs.

Experience and estimated probabilities and consequences of accidents indicate the radiological risk in transport accidents which result from packages which meet the present accident damage

9 0 0 2 9 0 1 3 8

"BEST AVAILABLE COPY"

test criteria is small (see Appendix B). Increasing the severity of the test conditions would require heavier or larger packaging designs to meet the criteria. Extra weight of packaging would reduce the ratio of weight of radioactive contents to package weight. Larger and heavier packages, in most cases, would mean a smaller number of packages per vehicle. The reduced ratio and fewer packages per vehicle would increase the number of shipments required to be shipped from an individual reactor. Increasing the number of shipments would increase the number of accidents in which such shipments would be involved.

Because the radiological risk is so small, imposing more stringent test criteria can achieve only a relatively small reduction in that risk. An increase in the number of accidents in which shipments of radioactive materials are involved tends to offset that advantage, because the overall risk from both radiological and common (i.e., non-radiological) causes is proportional to the number of accidents and the risk from common causes, although small (see Appendix C), is greater per accident than the risk from radiological causes.

Changes in the accident damage test criteria for radiological safety do not appear to be warranted in view of the small radiological risk as evaluated in this report. Considering the small overall risk in accidents and the present balance of radiological vs. common cause control, we conclude that the present accident damage test criteria provide control over the radiological risk to a level as low as practicable.

F. Nuclear Parks

The term "nuclear park" applies to a nuclear industry complex or cluster in which the nuclear fuel is fabricated, used, and reprocessed on the same or contiguous sites. This requires that fuel fabrication and fuel recovery facilities be located in the cluster with the nuclear power plant. In such a cluster, transportation of unirradiated and irradiated nuclear fuel for the power plant would be limited to movement on the site.

When and if nuclear parks are developed, this will minimize the risk from transportation of nuclear fuel.

APPENDIX A

ANALYSIS OF TRANSPORTATION ACCIDENTS

Introduction

One of the purposes of regulations applicable to the transportation of radioactive material is to assure that the risk of injury or damage to property from accidents in transport is low. With respect to radiological effects, this is achieved by a combination of limitations on contents, package design, and quality assurance requirements and controls exercised over storage and loading during transport. The probability of a vehicle carrying a shipment of radioactive material being involved in an accident in transport is not greater, and experience indicates it is less, than the probability of a vehicle of the same type transporting other goods being involved in an accident. In consideration of the environmental risks associated with transportation accidents, the probability of their occurrence and their consequences must both be taken into account.

As to the consequences, either the contents of each package must be limited so that in the unlikely event the contents were released, the consequences would not be serious or the package must be designed to prevent loss of contents or shielding and assure nuclear criticality safety under accident conditions. While the package design standards do not provide a completely indestructible package, it would require a very severe and highly unusual accident to breach a container. An analysis of the severity and probability of occurrence of accidents follows.

Experience

In the past 25 years, several millions of packages of radioactive material, including approximately 3600 packages of irradiated fuel, have been transported in routine commerce. The Department of Transportation estimates at present about 800,000 are shipped each year in the U. S. During that same period, there have been only about 300 accidents recorded[37,40] in which radioactive material were involved. None of these[41] resulted in serious injury of people as a result of the radioactive nature of the material. In only about 30% of those accidents was there any release of radioactive material from the package or increase in the radiation levels outside the package.

"BEST AVAILABLE COPY"

The accident statistics related above represent an excellent record of safety in the transportation of radioactive material. Since the accidents involving radioactive materials which have occurred are small in number and present only a limited range of conditions likely to arise in transportation and consequences of potential accidents, other data must be relied on for analysis and projection of the risk from accidents involving radioactive materials. One source of that data is accident experience with other hazardous materials. In 1971, 2255 accidents involving hazardous materials were reported to the DOT; only 10 involved radioactive materials. Two of the 10 accidents involved only empty radioactive material containers; 1 resulted in increased radiation levels; 2 produced low levels of contamination outside the vehicle and 1 (the Delta Airlines incident of December 31, 1971) produced contamination of a cargo compartment and some luggage and required a considerable amount of effort to clean up. In another accident, a shipment of UF_6 in large cylinders was involved in a train derailment but there was no release of UF_6. In 1972, through June 23, a total of 1696 accidents were reported to DOT; 8 involved radioactive materials. Only one of the 8 involved any release of radioactive material and that was a sealed source released from the package which was recovered with no residual contamination.

These statistics represent a distribution of accidents in transport skewed toward the severe end since the statistics include only reportable accidents, i.e., accidents which result in an injury or fatality or property damage in excess of $250.

Accident Model for Analysis

For analysis of data on accidents, an accident can be divided into a series of events and each event treated as a separate component. The progression of events involved in an accident which may result in damage from radiation effects are presented in a highly simplified model. Data for some of the events are available and for some are incomplete. Data on impact and fire accident probabilities and severities are available. There are considerable test data on resistance of radioactive material packages to impact and fire up to the level of the package design test criteria. Based on the data known about the stresses produced on packages in real transportation accidents, it is believed the present standards assure packages of radioactive material will withstand all but very severe, highly unlikely accidents. This is borne out by the statistics related above.

Some hazards are present in normal operation and some arise in normal operation. A threshold exists at each stage in the progression of

events identified as an accident. If the hazard or combination of hazards at any stage fails to exceed the threshold, the process of the accident stops and no damage results. For example, if the impact energy absorbed by the vehicle is such that the energy transmitted to the package is below that which will cause failure of the package, and other forms of stress (such as failure of the tie-down or fire) do not develop, the progress of the accident stops at that point.

The packaging standards and criteria establish that threshold; for industrial type packaging and Type A packaging, the threshold is high under normal conditions and for Type B packaging, the threshold is high under both normal and accident conditions. The threshold of failure for packages is not known, although most Type A packages will withstand minor accidents and some will withstand severe accidents without loss of contents.[42] Type B packages are required to be designed to withstand specified accident damage test conditions; the point at which failure would occur is often not known. From an analysis of test results, it appears that some designs will withstand stresses well above the test conditions. Tests to destruction were made for certain types of containers in an attempt to better define that threshold.[43] The part of the package which fails and the type of failure, as well as the threshold of failure, vary from one type of package to another.

Transportation Accident Statistics[60]

The probabilities of accidents by truck, rail, and barge are derived below from statistics of accidents supplied by the U. S. Department of Transportation (DOT) for 1969 and 1970.[36,44,45] The conditions likely to be encountered in the accidents in terms of velocity of impact of the vehicle and incidence and duration of fire were developed from analyses made by Leimkuhler,[46] various statistics on frequency of fires, and information in the 1969 and 1970 accident statistics referred to above.

Accidents occur in a range of frequencies and severities. Most accidents occur at low vehicle speeds; the severity of accidents is greater at higher speeds but the frequency decreases as the severity increases. Accidents generally involve some combination of impact, puncture, and fire effects.

For purposes of this analysis, accidents are divided into five categories - minor, moderate, severe, extra severe and extreme.

9 0 0 2 9 0 1 4 0

"BEST AVAILABLE COPY"

FIGURE 7. TRANSPORTATION ACCIDENT RADIATION EFFECTS MODEL

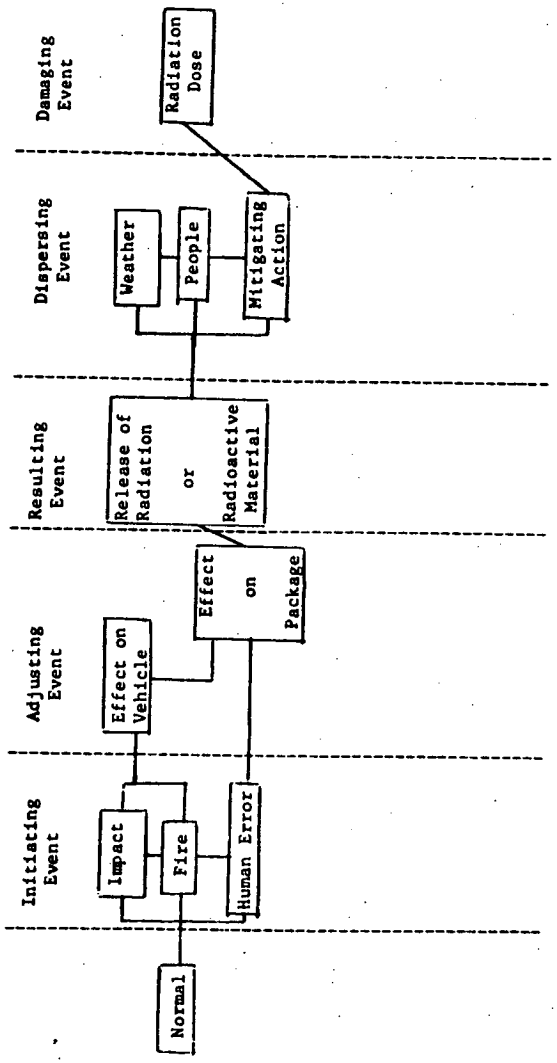

Accident Statistics for Trucks

In 1969, large motor carriers[36] reported a total of 38,813 accidents involving death, injury, or property damage in excess of $250. The accidents included 19,682 injuries, 1,497 fatalities, with an overall accident rate of 2.46 accidents per million vehicle miles. For hazardous materials shipments, the accident rate was 1.69 per million vehicle miles. The overall accident rates per million vehicle miles for previous years are 3.2 for 1964; 2.3 for 1965; 2.4 for 1966; 2.4 for 1967; and 2.5 for 1968. Fifty percent of the reportable accidents involved collision with autos or buses, 15.5% collisions with other trucks, 14% collisions with fixed objects, 0.6% collisions with trains, 9.5% were roll-overs or run-offs, and 11.4% other types of accidents. Fire occurred in 1.57% of the reportable accidents.[47]

In truck accidents, severe damage to the package may be encountered in all types of accidents. Impacts which are likely to be most damaging are those on stationary, rigid objects, such as concrete abutments or bridge structures. In collisions with an object, yielding or crushing of the vehicle or the object with which the vehicle collides reduces the impact received by the package. Roll-overs usually occur at higher speeds, and must be considered as potential contributors to major damage of a package.

A study in 1960[46] showed the following percentages of accidents for the four ranges of truck speeds given. We have assumed those percentages apply to the four ranges of speeds used in our analysis of 0-30, 30-50, 50-70, and >70 mph.

TABLE 1

Type of Accident	Speed in MPH 0-32	32-52	52-72	>72
All accidents	23.7%	56.0%	19.8%	0.5%
Collisions with autos and buses	34%	42%	23%	1%
Collisions with other trucks	25%	72%	3%	0.1%
Overturns and other collisions	8%	69%	23%	0%

Truck fire data[36] indicate that fire is involved in about 0.8% of truck-truck collisions, 0.3% of the truck-auto collisions, 0.6% of truck-fixed

"BEST AVAILABLE COPY"

object collisions, 2% of the truck-train collisions, and 1% of the roll-over/run-off accidents. Most fires involve only the fuel from the vehicle fuel tanks, and last less than 1/2 hour, unless other freight becomes involved. Only in the case of truck-truck collisions is there likely to be a larger supply of fuel involved, e.g., a collision with a gasoline tank truck or a truck loaded with paint. Some fires start from overheated tires or accidental ignition of cargo. Truck-auto, truck-bus, and single-vehicle accidents were considered to be essentially free of fires lasting longer than 1/2 hour.

It is assumed that only in truck-truck accidents is there a credible likelihood that fires would occur which last more than 1/2 hour, and then only when one of the trucks is carrying significant amounts of flammable liquids as cargo (e.g., tank trucks of gasoline or liquefied petroleum gas; or van trailers carrying barrels of paint). For lack of data on the percentage of trucks carrying flammables, it is conservatively assumed that at least one of the trucks in each truck-truck accident is carrying flammable cargo. Of all truck accidents, 15.5% involve other trucks, i.e., are truck-truck accidents having a potential for long fires.

Of the fires which do occur, it has been estimated[46] that 1% of the fires last more than one hour, 10% last between 1/2 hour and one hour and the balance, 89%, last less than 1/2 hour. Although there are fires in transport which last for several days, in most cases these involve the burning of only small amounts of fuel per unit time, and are of little consequence in terms of heat output.

The probabilities for truck accidents are listed in Table 3.

Accident Statistics for Railroad Cars

In 1969, for a total number of car miles of about 61 billion, the rail industry[44] reported a total of 8,543 accidents involving death, injury, or property damage in excess of $750, of which 4,971 were other than grade-crossing accidents. The accidents included 23,356 injuries, 2,299 fatalities.

In 1969,[44] the total number of accidents per million train miles was 9.89; for 1968, it was 9.16; and for 1967, it was 8.15. The average train length is about 70 cars.

The overall accident rate is 0.14 train accidents per million car miles. The accident rate for other than grade-crossing accidents is 0.08 train

accidents per million car miles. Each accident involves an average of 10 rail cars, so the accident rate per car for other than grade-crossing accident would be about 0.8 car accidents per million car miles.

Twenty-one percent of the reportable accidents were collisions, 70% were derailments, and 9% were other types of accidents. About 1.5% of the rail accidents involved fire, most of them occurring in serious derailments in overland movements.

In rail accidents, severe damage to the cargo may be encountered in both collision and derailment type accidents. Rail grade-crossing accidents (train-truck or train-auto) rarely involve significant damage to cargo. Other collision type accidents which do not cause derailment are not likely to involve significant damage to a package. Accidents which have the highest probability of producing significant damage to shipment containers are overland derailment accidents which involve either impact of the packages on forward cars, or impact on the packages by rearward cars.

The accident rate of 0.8 car accidents per million car miles for other than grade-crossing accidents was used as the probability of a railroad car carrying a shipment being involved in an accident that might cause damage to that shipment. The overall accident rate of 0.14 train accidents per million car miles was used in estimating the effects from common causes of a car being involved in an accident.

An unpublished study by the DOT of the total accidents that occur at various speeds indicates that 58.5% of all train accidents occur at a speed less than 30 miles an hour, 32% occur at a speed between 30-50 miles an hour, 9.4% occur between 50-70 miles an hour, and 0.1% occur at speeds exceeding 70 miles an hour.

Fires other than those involving ruptured tank cars of flammable liquids are unlikely to last longer than 1/2 hour, due to lack of sufficient fuel. Data relating major fires to train speed are sparse. It is estimated that 1.5% of all rail accidents involve fire of which 85% last less than 1/2 hour, 14% last between 1/2 hour and 1 hour, and 1% of the fires last more than 1 hour.

The probabilities for rail accidents are listed in Table 3.

90029 01 42

"BEST AVAILABLE COPY"

Accident Statistics for Barges

Records for fiscal year 1970 for domestic waterborne traffic[45] show a total of 506 billion ton-miles of water traffic with 548 cargo barge accidents reported. Data are not available to indicate the fraction of those ton-miles due to barge traffic. We estimated the total barge ton-miles to be 380 billion. According to the Coast Guard report, miscellaneous types of vessels, including cargo barges, were involved in accidents which resulted in 33 injuries and 33 fatalities during that period.

The available data can not be analyzed in the same way as the data for rail or truck transport. On the basis of discussions with the U. S. Coast Guard, it is assumed that the average net (cargo) weight of a typical barge is about 1,200 tons. The total number of barge-miles would then be about 310 million. This yields an accident rate of about 1.8 accidents per million barge miles.

There are very few data available on the severity of accidents involving barges. Barges travel only a few miles per hour; therefore, the velocity of impacts in accidents would be small. Because of the large mass of the vehicle and cargo, severe impact forces could be encountered by packages (spent fuel casks) aboard barges. A forward barge could impact on a bridge pier and suffer crushing forces due to other barges being pushed into it. A coastal or river ship could knife into a barge. Fires could result in either case. An extreme accident, i.e., an extreme impact plus a long fire, is not considered credible. The likelihood of a severe fire in barge accidents is small because of the availability of water at all times. Also, since casks could be kept cool by sprays or submergence in water, loss of mechanical cooling can be compensated for.

The likelihood of cargo damage occurring in a barge accident is much less than in the case of rail accidents. For purposes of this analysis, and based on U. S. Coast Guard data, it is estimated that about 90% of the barge accidents would result in minor or no damage to the cargo, and would not involve fires. Moderate cargo damage due to impact would result in 8% of the barge accidents and severe damage in 2%. Fire would be likely only in those accidents involving moderate or severe cargo damage, and it is estimated that the likelihood of a fire in severe accidents would be 10 times that in moderate accidents. Based on the 1970 data, with only one cargo fire reported, it is estimated that fire would occur in 0.65% of the moderate accidents and 6.5% of the severe accidents.

There are no data on the duration of fires in barge accidents so we have used the rail figures of 85% of all fires lasting less than 1/2 hour, 14% lasting between 1/2 and 1 hour, and 1% lasting more than 1 hour.

The probabilities for barge accidents have been incorporated into Table 3.

Accident Severity Categories

In Table 2, accidents are categorized by degree of severity in terms of velocity of vehicle impact and incidence and duration of fire.

TABLE 2

Accident Severity Category	Vehicle Speed at Impact (mph)	Fire Duration (hr)
1. Minor	0-30	0-1/2
	30-50	0
2. Moderate	0-30	1/2-1
	30-70	<1/2
3. Severe	0-50	>1
	30-70	1/2-1
	>70	0-1/2
4. Extra Severe	50-70	>1
	>70	1/2-1
5. Extreme	>70	>1

Accident Probability

Table 3 shows the probabilities of an accident in each of the five accident severity categories and for each of the three modes of transport calculated on the basis of the data presented earlier.

From Table 3, we see that the differences between the truck, train, and barge accident probabilities in terms of accidents per mile in each of the severity categories are small. For purposes of estimating the risks

9 0 0 2 9 0 1 4 3

"BEST AVAILABLE COPY"

TABLE 3

ACCIDENT PROBABILITY

Severity Category	Vehicle Speed (mph)	Fire Duration (hr)	Probability per Vehicle Mile: Rail	Truck	Barge*
Minor	0-30	<1/2	$6x10^{-9}$	$6x10^{-9}$	--
	0-30	0	$4.7x10^{-7}$	$4x10^{-7}$	$1.6x10^{-6}$
	30-50	0	$2.6x10^{-7}$	$9x10^{-7}$	$1.4x10^{-7}$
Total			$7.3x10^{-7}$	$1.3x10^{-6}$	$1.7x10^{-6}$
Moderate	0-30	1/2-1	$9.3x10^{-10}$	$5x10^{-11}$	--
	30-50	<1/2	$3.3x10^{-9}$	$1x10^{-8}$	$8x10^{-9}$
	50-70	<1/2	$9.9x10^{-10}$	$5x10^{-9}$	$2x10^{-9}$
	50-70	0	$7.5x10^{-8}$	$3x10^{-7}$	$3.4x10^{-8}$
Total			$7.9x10^{-8}$	$3x10^{-7}$	$4.4x10^{-8}$
Severe	0-30	>1	$7.0x10^{-11}$	$5x10^{-12}$	--
	30-50	>1	$3.9x10^{-11}$	$1x10^{-11}$	$9.3x10^{-11}$
	30-50	1/2-1	$5.1x10^{-10}$	$1x10^{-10}$	$1.3x10^{-9}$
	50-70	1/2-1	$1.5x10^{-10}$	$6x10^{-12}$	$3.3x10^{-10}$
	>70	<1/2	$1x10^{-11}$	$1x10^{-10}$	--
	>70	0	$8x10^{-10}$	$8x10^{-9}$	--
Total			$1.5x10^{-9}$	$8x10^{-9}$	$1.6x10^{-9}$
Extra Severe	50-70	>1	$1.1x10^{-11}$	$6x10^{-13}$	$2.3x10^{-11}$
	>70	1/2-1	$1.6x10^{-12}$	$2x10^{-13}$	--
Total			$1.3x10^{-11}$	$8x10^{-13}$	$2.3x10^{-11}$
Extreme	>70	>1	$1.2x10^{-13}$	$2x10^{-14}$	--
Total			$1.2x10^{-13}$	$2x10^{-14}$	--

* Barge accident probabilities are based on the duration of the fire and actuarial data on cargo damage. The impact velocities of all barge accidents were considered to be less than 10 mph, but for the purposes of this table, minor cargo damage is assumed to be equivalent to vehicle impact speeds of 0-30, moderate cargo damage 30-50 and severe cargo damage 50-70.

in this analysis, a single value rounded off to one significant figure is taken for all three modes of transport as shown in Table 4.

TABLE 4

Accident Probabilities for Truck, Rail, and Barge per Vehicle Mile for the Accident Severity Categories

Minor	Moderate	Severe	Extra Severe	Extreme
2×10^{-6}	3×10^{-7}	8×10^{-9}	2×10^{-11}	1×10^{-13}

Unusual Accidents

Certain other accident circumstances can be postulated which may have a damaging effect on a package and for which the probability depends on other than the number of miles traveled.

1. Landslides. If an irradiated fuel cask is covered in a landslide such that it is unable to dissipate its heat, the temperature in the container will continue to rise until the container reaches equilibrium or is removed from the insulating surroundings. The probability that an irradiated fuel shipment would be present on a truck or railcar which is involved in a landslide and the irradiated fuel cask covered with dirt in a manner such that very little of the heat can be dissipated is believed to be extremely small.

2. Immersion in Water. Because very few accidents and few transshipments involving shipments of fuel or radwaste are expected to occur over water, it is extremely unlikely that a package of fuel or radwaste would be accidentally dropped into water. If dropped into shallow water, the package is unlikely to be damaged. In most cases, a package, cask or drum dropped into deep water would leak inward, through a gasket or valve, so the external and internal pressures would equalize as the package, cask, or drum sinks.[48,49,50] In some cases, the container might collapse. Some small amounts of radioactive material might be released. The container would seek the lowest level possible, either at the bottom or at a flotation level if the contents were low-density materials and remain at that level until recovered, or until dissolved by the corrosive effects of the water over many years.

90029 0144

"BEST AVAILABLE COPY"

The heat from a cask of irradiated fuel immersed in water would be released to the water. In most cases, suitable recovery procedures could be implemented in a reasonable length of time to remove this thermal heat source from the body of water. For this reason and because such an accident has such a low probability of occurrence, the heating of the water in such an accident is too small to justify quantitative evaluation.

3. Human Error. The adequacy of the design of a container can be compromised by an error on the part of the person loading and closing the package. One or more bolts may be left out or not properly tightened, a gasket misplaced or omitted, or a brace or "holddown" piece left off. The chances of such an error are small because of the procedures required by the regulations for examination of the closed container prior to each shipment, including tests for leak tightness, where necessary.

Use of the wrong materials or errors made in construction also can result in a container failing to function properly during transport. The requirements imposed by the regulations on container manufacturers and shippers reduce the likelihood of such errors not being corrected prior to use.

Each year a few packages are reported to have leaked even though not involved in an accident (e.g., the Delta Airlines incident of December 31, 1971), perhaps 8 out of 800,000. Many of these incidents are believed to be due to human error in closing the container. Perhaps 1 in 10 improperly closed packages is detected and reported. These usually involve shipments of liquids or gases and the amount of leakage is small. For such containers, Type A packages, it is estimated that 1 in 10,000 shipments is improperly closed when shipped.

Taking into account the size of the components in most Type B packages, e.g., casks, and the attention to detail required in the closing procedures for casks and other Type B packages, it is estimated that 1 in 100,000 type B packages, including irradiated fuel casks, may be improperly closed when shipped.

Relationship of Accident Severity to Package Damage

The amount of damage to a package in an accident is not directly related to the accident severity; that is, in a series of accidents of the same severity, or in a single accident involving a number of packages, the amount of damage to the packages involved may vary from no damage to extensive damage.

Various factors limit the effect accident conditions will have on a package.[51,52] In relatively minor accidents, serious damage to packages can occur due to impacting on sharp objects or by being struck by other cargo. Conversely, in extreme accidents, damage to some packages may be minimal. In some cases, the packages may be thrown free of the impacting vehicles or be so located in the vehicle that they are unaffected by the impact or the fire that ensues. Package damage depends on the form and amount of energy sustained by the package and the ability of the package to withstand those forces. The form and amount of the energy transmitted to the package in an accident depends on several factors which vary according to the accident circumstances.

The ability of a package to withstand accident forces depends on the design of the package and the quality assurance exercised in its manufacture, use, and maintenance.

DOT and AEC regulations specify certain package accident damage tests[53] which provide a means for reproducing in the laboratory or in the field the same general type and degree of damage a package might reasonably be expected to sustain in a severe transportation accident. Any package which can be shown to meet those standards is called a "Type B" package and can be expected to withstand accidents without leakage or significant shielding loss. The tests do not in themselves represent a transportation accident.

There are four such tests. They are a 30-foot freefall onto a flat unyielding surface, a 40-inch freefall onto a steel plunger, a thermal test and immersion in water. To better understand the design requirements imposed by the accident damage test criteria, the 30-foot freefall and the thermal test are discussed in some detail.

Although the velocity at the time of impact in the drop test is about 30 mph, the test requires dropping the package, including the protective shield if it is part of the package, on an unyielding surface. In very few accidents does the vehicle impact with an unyielding surface. In a real accident, the forces the package sustains are mitigated by the angle of impact of the vehicle, the crushing of the vehicle, which absorbs much of the impact, and the fact that, for impacts of heavy objects such as transporting trucks, the object with which the truck collides in most cases yields and thus absorbs some of the impact.

For example, in an instrumented full-scale test of a 15-ton cask on a semi-trailer in which the trailer was driven into an immovable barrier at 28.5 miles per hour,[35] the cask received only a fraction of the stress it was designed to withstand. The cask remained tied in place on the trailer and was undamaged, while the tractor was completely demolished.

9 0 0 2 9 0 1 4 5

"BEST AVAILABLE COPY"

As part of that same test series, a semi-trailer truck loaded with several different types of drums was driven into the immovable target at 42 mph. Several of the drums lost their lids but none of the inner containers was released or opened. About 50% of the drums were not damaged.

With respect to fire, the package must be designed to withstand the thermal test in which the package is subjected to the heat input from a radiant environment having a temperature of 1475°F and an emissivity of 0.9 for 30 minutes.

Severe transportation fires seldom last more than 1/2 hour, except in ships and storage depots,[54] because either the fuel is exhausted or the fire is extinguished by fire fighting crews. Although flame temperatures of liquids such as jet fuel or kerosene may reach 1800°F-2000°F, such peak temperatures are reached only very locally on the surface of material involved in the fire. Only under very unusual circumstances is more than 50% of a package surface likely to be exposed to the flame for as long as 1/2 hour. Even in a longer fire, the package may be in a location where the fire has little or no effect on it.

For the above reasons, it is concluded that a package designed to meet the thermal test requirements in the regulations as a Type B package is likely to withstand the fire conditions in transportation accidents.

Type A Packages (e.g., drums of low level radwastes)

It is unlikely that a Type A package will be damaged and very unlikely that it will be breached in a minor accident. Based on experience and tests,[35] some fraction, perhaps 10%, of Type A packages will not be breached in very severe accidents.

Type B Packages

Based on regulatory standards and requirements for package design and quality assurance, results of tests, and past experience, Type B packages are likely to withstand all but very severe, highly unusual accidents. The probability of a Type B package being breached is low, so low that detailed consideration is not required in this analysis. Although the consequences of a release could be serious, the probability of occurrence is small, and therefore the risk or impact on the environment is very small.

APPENDIX B - SECTION I

CONSEQUENCES OF TRANSPORTATION ACCIDENTS INVOLVING SHIPMENTS OF NUCLEAR FUEL OR SOLID RADIOACTIVE WASTE

Estimates of Releases in Accidents

Estimates of the amount of radioactive material released in the unlikely event that a container is breached are given in this Appendix, taking into account engineering assessments of a variety of package designs, actual accident experience, the properties of the fuel and radwaste, and experience in shipment, reactor operation, and storage. In the case of Type B packages, the accidents analyzed which exceed the design basis accidents are practically incredible.

The mechanical and physical effects the accident forces would have on the contents, i.e., the fuel rods and solidified or compacted waste, and on the rate and amount of release when a breach of containment occurred, were considered in estimating the release in each type of accident. Consideration also was given the influence of the accident forces on dispersion of the released material. The consequences in terms of potential doses to people were calculated for the estimated releases of krypton-85, iodine-131, and fission products. Normal distributions of weather and population densities for a release on land were used in the calculations.

The overall probability of a release into water is smaller than release on land because, with the exception of barge transportation, most of the transportation occurs over land.

The consequences of a release into water would depend on the characteristics of the material released and the conditions of use of the water. The release into water could affect soluble materials, and very little of the solid radwaste and none of the nuclear fuel is shipped in soluble form. With respect to release of fumes or dust, if the material is not soluble, the potential exposure levels would probably be smaller since dispersion in water would result in dilution. For dusts or fumes, even if soluble, the limits on the concentration in air are more restrictive than the limits on the concentrations in water. Also, if desired, depending on the circumstances, some restrictions on the use of contaminated water could be imposed.

Assumptions as realistic as the state of knowledge permits were used in estimating the consequences of accidents. Wherever possible, realistic

"BEST AVAILABLE COPY"

average values were used; otherwise pessimistic assumptions were made. For example, in estimating exposures in an accident, ground livel releases were assumed. The rise of the heated plume in a fire was not considered, although in most cases that would reduce the effects. The distribution of population density in the Eastern United States as projected by the Staff for 1980 was taken as representative of the population densities along routes on which the shipments will travel.

For analysis of accidents, random distribution of the population was assumed; that is, it was assumed that an accident may occur in each population density with a probability equal to that with which that density is found in the distribution. In general, however, the probability of an extremely severe accident is less in the higher populated areas owing to generally lower vehicle speeds and, for rail transport, better maintained roadways.

Some accidents in transportation may produce stresses on packages more severe than the stresses the packages are designed to withstand. The consequences of such accidents could be serious but the probability of occurrence of such accidents is extremely low. Quality assurance for design, manufacture, and use of the packages; continued surveillance and testing of packages and transport conditions; conservative design of packages; and the low probability of occurrence make the environmental risk from such accidents extremely low.

For this analysis, the present methods of packaging, ways and means of transportation, traffic patterns, etc., have been assumed to continue in use for the projected period of operation of the reactor.

The values of package damage chosen are related to the present level of design requirements in the packaging standards and criteria. Should the standards be lowered, the fractions of packages damaged in all types of accidents would be expected to increase, although the exact relationship would be difficult to predict. If the standards were increased, the fraction damaged would be expected to shift downward. Since the damage to the package does not depend directly on the severity of the accident, adding structural strength or stress resistance to the design would not be expected to reduce damage in direct proportion to the added strength. Furthermore, the added strength may increase the risk from common causes due to increased weight and number of shipments.

Based on consideration of the quantity and form of radioactive material in the package, postulated accident conditions, and certain other factors, the following estimates were made of the number of curies, Q, of radioactive material which might be released from a damaged package.

For any set of accident conditions which causes a breach in the container, a range of amounts of radioactive material might be released; that is, the quantity might range from nothing to a significant fraction of the contents. The amount estimated to be released, Q, represents the most probable maximum release for that set of accident conditions. An amount greater than Q is considered to be less likely to be released under the same conditions than the estimated amount.

If sufficient data were available, the probability of release, P_R, for each release could be calculated based on the probability of an accident of a particular severity occurring, the probability of a package being breached in such an accident, and the probability of the release occurring with the package breached.

Using the calculative method outlined in Section II of Appendix B, the probability of release, P_R, and amounts of radioactive release, Q_o, could be used to derive estimates of the probability that N or more persons would receive a radiation dose of D or more mrem in a transportation accident.

The calculative procedure requires a determination of the probability of one or more persons receiving a specified dose for each of the accidents postulated. A summation of the probabilities for all of the accidents in a spectrum of accidents would provide an estimate of the overall probability of one or more persons getting a dose of D or more mrem from all accidents.

The spectrum of accidents should include the entire range of credible accidents up to the point that either the probability or the consequences of other accidents is so small that they would be unlikely to affect the value calculated for the postulated range of accidents.

Unirradiated Fuel

Because of the low level of radioactivity in unirradiated fuel, the design of packaging for unirradiated fuel is not required to be as rugged as the design of packagings for higher levels of radioactivity, and therefore is more susceptible to damage in an accident. The form of the unirradiated fuel, i.e., high-density, high-melting point pelletized uranium oxide contained in sealed zircaloy tubes, makes the dispersion of any of the oxide extremely unlikely even in the event of severe damage to a package of fuel. The radioactivity of the oxide is very low. Even if some dispersion were to occur, the radiation doses would be very small. Except for an accident resulting in nuclear criticality, the radiological impact on the environment from accidents involving unirradiated fuel is negligible.

90029 0147

"BEST AVAILABLE COPY"

Containers for shipping unirradiated fuel are required to be designed to prevent accidental criticality under normal and accident conditions. Considering the practical conditions required for achieving criticality (viz., release of a number of fuel elements from their respective containers, assembly of these elements in a close array and moderated, e.g., with water in and around the assembly), the probability of criticality being achieved in an accident is extremely small. If such an accident should occur, the consequences would be mitigated by having taken place in a moderator such as water which acts as both a radiation shield and an absorber of some of the gaseous fission products which might be released.

The consequences of postulated accidents involving unirradiated fuel shipments are summarized below:

1. Normal conditions--nothing released even if the lid is loose.

2. Accidents--nothing significant released except in unusual circumstances: e.g.,

   a. Fuel element is knocked out of a package and run over by a train. It is unlikely that contamination of other than localized areas would occur; no significant airborne contamination would be expected.

   b. Accidental criticality. Consequences:

      In the unlikely event of accidental criticality, the critical array likely would be quickly disassembled by pressures developed during the reaction but a nuclear explosion is impossible. The critical reaction would last only a few seconds and probably would not recur. It is estimated from 10^{17} to 10^{18} fissions might take place[16] but this would not be expected to cause release of any radioactive materials from the fuel elements. Residual radiation levels due to induced radioactivity in the fuel elements might reach a few rem per hour at 3 feet.

      Persons within a few feet of such a critical assembly would receive a lethal dose of gamma and neutron radiation unless shielded by intervening material. Persons beyond 100 feet would be unlikely to receive serious radiation exposures; the cumulative dose to the 7500 persons located within 1/2 mile of the incident but beyond 100 feet is estimated to be no more than 500 man-rem. The consequences would be reduced because the reaction takes place in a moderator such as water which acts

both as a radiation shield and an absorber of some of the gaseous fission products if any were released. Recovery of the fuel elements and cleanup of the immediate area would be required.

Irradiated Fuel

Irradiated fuel is packaged in large, rugged containers, frequently with liquid coolant, because of the high radiation levels and heat output. At the time of shipment, the irradiated fuel will have been "cooled" about 150 days, on the average. The total radioactivity in the fuel will be approximately 4×10^6 curies per metric ton of irradiated fuel.

Measurements made in reactor operation show that no activity other than some gases will be released from intact fuel assemblies. That means that until the fuel cladding is broken or perforated, only the surface contamination on the fuel assemblies (activation and corrosion products, mostly Co-60 and Fe-59) would be expected to be present outside of the fuel cladding.

If the cladding of a fuel rod is penetrated, some of the radioactivity from inside the fuel rods may be released. The staff estimates all of the free gases in the void spaces and a fraction of the semi-volatile and a smaller fraction of the non-volatile fission products and actinides might be released. Table 2 gives estimates of the activities in gaseous or other mobile form in the fuel rod void spaces which would be available for release from the fuel rods if the cladding were broken or perforated. The gases of significance are Kr-85, Xe-131m, and I-131.

Because of the regulatory limits in 10 CFR 71.35 on the radioactivity in the cask coolant, any fuel assembly which is releasing a significant amount of radioactivity must be placed in a separate, sealed container (i.e., "canned") prior to being loaded into the cask for shipment. Fuel assemblies releasing significant amounts of radioactivity while in the reactor will have been identified before being discharged from the reactor but some so-called "failed fuel" may go undetected. In the case of "failed fuel," much of the radioactivity in the fuel rod void space may have been released during the time the assembly remained in the reactor after failure and while stored in the canal for cooling prior to shipment.

It is believed conservative to assume that, under normal conditions of transport, 0.25% of the free gases and other activities from the fuel rod spaces would be outside the fuel assemblies in the cask coolant or cask cavity, in addition to the surface contamination mentioned above. Some residual contamination from the storage pool might also remain in the cask cavity and hence the coolant, since the loading operation is carried out in the storage pool water.

Under normal conditions the primary coolant, that is, the coolant which is in contact with the irradiated fuel in the cask, may be contaminated but the level of contamination will be small. Based on recent experience

90029 0148

"BEST AVAILABLE COPY"

reported at the Savannah River Plant, the activity in water-filled casks ranges from 10^{-4} to 10^{-2} μCi/cc. For the higher burn-up power fuel, a level of 1 μCi/cc has been estimated. The activity may include a mixture of activation, corrosion, and fission products.

The total amount of activity in the coolant based on 10^6 cc of coolant in a rail cask and 10^5 cc in a truck cask would be 1 Ci and 0.1 Ci, respectively. For purposes of estimating releases in accidents, that activity is assumed to be present in the coolant in the form of fission products. Under normal conditions, that activity would be present in addition to the Kr-85 and I-131 released from the air gap in the fuel due to perforations in the cladding of a small fraction of the rods. From preliminary analyses, it appears that it would require a severe impact, probably in excess of 50 miles per hour, to cause fuel rods to rupture. When accident conditions result in perforation of a greater percentage of the rods, additional fission products are assumed to be released as indicated in Table 2.

Most casks have a pressure relief system which is expected to vent when the internal pressure exceeds a preset level. At present, the systems are usually designed to reseal after the excess pressure is relieved.

TABLE 1

Basic Estimates - Irradiated Fuel

0.5 MT irradiated fuel per cask for truck

3.2 MT irradiated fuel per cask for rail

1 cask per truck or rail car

60 truck shipments per 1100 MWe reactor-year

10 rail shipments per 1100 MWe reactor-year

1000 miles shipping distance from power plant to fuel recovery plant.

Percentage of material released from irradiated fuel cask which becomes airborne:

100% of gases (krypton & iodine)

1% of the contaminants in the coolant in the absence of fire and 10% if fire is present.

TABLE 2

FUEL ROD VOID SPACE ACTIVITY

Type of Radioactive Material	Total Inventory[16] 150 days cooling curies/metric ton	% in void spaces of fuel rods	Activity in void spaces, curies/metric ton
Kr-85	1.12×10^4	30	3.4×10^3
I-131	2.17	2	4.3×10^{-2}
Other fission products	4.39×10^6	0.01**	400
Actinides, (Pu,Am,Cm,etc.)	1.36×10^5	essentially none	neg.***
Xe-131m	3.27	2	0.1***
I-129	2×10^{-3} [20]	30	6×10^{-4}***
H-3	6.92×10^2	1	7***

* Realistic gap activities in terms of percent of total inventory prepared by AEC's Directorate of Licensing based on references 20 through 32.

** A conservative (high) value estimated on the basis of leaching the outer 1.2×10^{-5} inches from the surface of the uranium oxide fuel.

*** Due to the small amounts present, the dose contribution from Xe, I-129, H-3, and the actinides may be neglected compared to the doses from the other radionuclides.

90029 0149

"BEST AVAILABLE COPY"

TABLE 3

ESTIMATED RELEASES FROM RAIL CASKS
UNDER UNUSUAL ACCIDENT CONDITIONS

		Q, Activity Released* (in curies) Kr	I-131	Fission Products
I.	Undetected Leak: coolant released at a rate of 0.001 cc/sec; 450 cc in 5 days	-	-	4.5×10^{-4}
II.	Overpressure Pressure relief valve operated 0.1% of coolant released 0.25% of fuel rods perforated	0.03	3×10^{-7}	1×10^{-3}
III.	Overheated All coolant released	30	3×10^{-4}	1
IV.	Assume 50% of fuel rods perforated - all coolant released	5.5×10^{3}	0.1	650

* Based on the rail cask containing 3.5 metric tons of fuel. Equivalent releases from truck casks carrying 0.5 metric tons of fuel would be about 1/7th the activities shown except for the undetected leak which would be the same as shown.

In one design of rail cask now under evaluation (GE, IF-300),[55] complete failure of the external cooling system will cause the cask to overheat over a period of several hours. In that case, under certain adverse but unlikely conditions, the temperature of 50% of the fuel elements would reach 1200°F, which could cause perforation of the cladding on some of the rods if the elements were of the present PWR type. According to the analysis, the present BWR type of elements would not be expected to perforate.

Truck casks are not expected to reach rod perforation temperatures except under an extended fire condition.

Four examples of postulated accidents involving irradiated fuel casks are given below.

Example 1. A rail cask containing 3.2 MT of irradiated fuel is in an accident involving a severe impact and fire which causes a breach in the containment. If 10% of the rods were perforated and 100% of the coolant released, as much as 1.1×10^{3} Ci of Kr-85, $1 \times 10^{-}$ Ci of I-131 and 130 Ci of gross fission products could be released.

The consequences of this type of accident were estimated assuming a ground-level release under average weather conditions with all of the krypton and iodine and 1% of the gross fission products being dispersed in the air. Because of the severity of the accident and the precautions taken immediately afterward, persons are not expected to be closer than 50 meters downwind from the accident, the direction in which the highest exposures would occur.

A cumulative whole-body dose of about 0.4 man-rem from the Kr-85 would be received by the million people nearest the accident, assuming 10^{4} persons per square mile. Persons 50 meters downwind could receive doses as high as those given in the Table 4.

The contamination on the ground, assuming the coolant is released as vapor and the contamination dispersed, would result in Range I levels, requiring decontamination according to standards[56] of the Environmental Protection Agency, over an area of about 3000 square feet and Range III levels, requiring further consideration as to whether specific action would be required, over an area of about 0.1 square mile. For a high population density of 10,000 persons per square mile, only one person must be evacuated in the 3,000 square foot area that is contaminated; the cost of evacuation and contamination cleanup is estimated to be $10,000 to $50,000.

90029 0150

"BEST AVAILABLE COPY"

TABLE 4

CALCULATED DOSES FROM RAIL ACCIDENT

	Organ	Centerline Dose* (rem)	Average Dose* (rem)
Kr-85	Skin	1.2	0.06
	Bone marrow, gonads, lens of the eye	0.02	8×10^{-4}
I-131	Thyroid	0.02	1×10^{-3}
Gross Fission Products	Bone	6	0.3
"	Lung	8	0.4

* The radioactive material would be distributed downwind from the accident so that the isopleth (i.e., boundary lines of equal doses) would be cigar-shaped. The centerline dose is the dose which might be received by a person on the centerline of that pattern at a distance of 50 meters from the accident and the average dose is the average of the doses to all persons at 50 meters in all directions from the accident.

The consequences of the accident described in this example also were estimated using the method outlined in Section II of this Appendix. The probabilities of N or more persons receiving doses of D or more millirem as a result of a release of 1.1×10^3 Ci of Kr-85, 1×10^{-2} Ci of I-131, and 130 Ci of gross fission products, with all of the krypton and iodine and 1% of the gross fission products being dispersed in the air, were calculated. The values for P_N/P_R are given in Table 5 through 8.

The number of rail shipments of irradiated fuel from a reactor is estimated to be 10 per year. For a shipping distance of 1,000 miles, that makes a total of 10,000 shipping miles per year. The probability of a shipment being involved in an extra-severe accident in transport is 1×10^{-11} per vehicle mile (see Appendix A). Based on the accident data available, the standards for design of the package and results of package tests, we estimate no more than 1 in 10 packages involved in an extra-severe accident would be damaged to the extent that a release of the magnitude specified could occur. Based on these numbers, the probability of a release (P_R) of the magnitude specified would be approximately 1×10^{-8} per reactor year from a transportation accident involving irradiated fuel.

If the probability of the release occuring is taken to be 10^{-8} per reactor year, the probabilities (P_N) of N or more persons receiving doses of D or more millirem per reactor year from the rail transportation of irradiated fuel would be the probabilities in Tables 5 through 8 multiplied by 10^{-8}. That is, each value given in the tables for (P_N/P_R) should be multiplied by (P_R) to obtain the probability (P_N).

As shown in the Tables 5 through 8, even if the probability of a release were substantially higher than 10^{-8}, the probability of a significant exposure as a result of releases of the magnitude assumed would still be small.

Example 2. Some designs of rail casks have an external mechanical cooling system. An accident may cause moderate damage to the cask such that the mechanical cooling system becomes inoperative. If no corrective action is taken and the ambient temperature is above 100°F, the temperature of the fuel in the cask will increase enough in a few hours to cause an overpressure in the cask cavity, and some of the coolant will be released through the vent system. This also may occur in some cask designs if the cask is involved in a severe fire.[57]

Venting may occur in a series of releases; one design permits about 5% of the gas in the cask cavity to be released at a time. The activity released would be quite small, amounting to perhaps 5% of the total activity in the

1510 6200 6

"BEST AVAILABLE COPY"

coolant. That design contains approximately 2.3×10^6 cc of water. For a contamination level of 1 microcurie per cc, the total activity released would be about 0.1 curie of primarily cesium-137.

Example 3. The rail cask in Example 2 is left unattended for several hours. The temperature of the fuel in the cask will continue to increase until adequate means are provided for dissipation of the heat. In a matter of several hours, some of the fuel may reach a temperature at which the cladding will perforate. Perforation is due to overpressure of gases in the air gaps and weakening of the cladding due to increased temperature. For example, in one rail cask design if the mechanical cooling system is inoperable and the ambient temperature remains at or near 130°F for at least 11 hours, the designer estimates 50% of the fuel rods may reach 1200°F, which is the perforation temperature for PWR fuel rods. Under the same conditions, BWR fuel elements would not be expected to reach perforation temperature.

The likelihood of a cask remaining unattended after loss of mechanical cooling or after being involved in a serious fire for a period long enough that overheating would be expected can be reduced by appropriate administrative controls such as escorts, alarming the mechanical cooling system, inspection of the shipment at regular intervals, and notification of the shipper in case of any failure of mechanical cooling or involvement in an accident. Where considered important, shippers may be required to establish and implement such procedures.

The radioactivity released in such an accident could be as much as 5.5×10^3 Ci of Kr-85, 0.1 Ci of I-131, and 650 Ci of gross fission products.

Example 4. Perhaps an accident results in the cask being covered with dirt and debris in a landslide or dumped into a pile of soft dirt or other cargo so that the cask would be unable to dissipate all of the heat generated by the fuel. Under most circumstances, the cask would be removed before reaching excessive temperatures, and the accident would produce no adverse consequences other than cost of recovery. However, the temperature of the container would continue to rise until the container reached equilibrium or was removed from the insulating surroundings. If a rail cask were not removed, the releases could equal those postulated above for the loss of mechanical cooling.

Release of Irradiated Fuel Elements

Considering current cask design practices, it is improbable, but not impossible, that a cask could be damaged to the extent that one or more fuel elements would be released from the cask. The methods of installing

and securing cask closure devices are such that the closure device is not likely to be opened or removed in any accident. Release of a fuel element is unlikely except in an extremely severe accident in which unusual circumstances cause rupture of the cask.

If seven irradiated fuel elements were released from a cask in an unusual accident, the radiation level at 100 feet could be as much as 10^4 r/hr. Assuming the fuel elements remained unshielded for 10 hours, approximately 30,000 persons within a mile radius (based on 10^4 persons/square mile) might receive a cumulative dose of about 1000 man-rem. If a person remained unshielded at an average distance of 100 feet from the fuel elements for 6 minutes, he might receive a dose of as much as 1000 rem. Persons remaining near the exposed fuel for any appreciable length of time may receive large doses of radiation. Someone at a distance of 10 feet from the exposed fuel for about a minute, would receive a dose of 1000 rem. Remote equipment would be required to erect a shield around the fuel elements or to place them in a shielded box or to repackage them.

Relationship of Releases to 10 CFR Part 71 Limits

The amounts of radioactivity estimated to be released from an irradiated fuel cask in the accidents postulated for this analysis differ from the amounts specified in the package design criteria in 10 CFR §71.36. The design criteria were derived on the basis of both safety and feasibility for a range of contents and container designs which had been identified at the time that rule was being developed.

The amounts of radioactivity estimated to be released in the accidents postulated in this analysis take into account the physical and chemical characteristics of the particular type of fuel under analysis (high burnup uranium oxide pellets) and were derived using measured and calculated values from operating experience in light-water reactors as well as in shipping of irradiated fuel.

Solid Radioactive Wastes

Estimates of probabilities and amounts of releases of solid radioactive wastes in accidents in transportation involve considerations different from those for irradiated fuel. The packaging for solid wastes includes both Type A and Type B packaging so that some of the packaging for waste is not expected to withstand the accident conditions.

The containment is provided by the form of the material (i.e., radioactive material bound on clothing, dispersed in concrete, or otherwise confined to some degree) and by the package--drums in most cases. The drums are

9 0 0 2 9 0 1 5 2

"BEST AVAILABLE COPY"

expected to lose lids under accident conditions with probability equal to that estimated for a small breach of containment.

The form of the material ranges from compacted combustible materials to material which has been dewatered and solidified, in most cases as concrete. The radioactive contamination in compacted waste usually will not be in an available form if released in an impact; that is, pieces of contaminated clothing, etc., may be spread around, but the contamination is bound on the inert materials, such as clothing, and is unlikely to be released from the clothing unless burned or washed out by water. On the other hand, the contaminated concrete is not likely to be affected by fire, but some of the concrete may be shattered by a strong impact force.

The probability and extent of release from a package of solid waste is about the same whether the waste is transported by truck or by rail. The same types of packages are shipped by truck and by rail. The only difference is that more packages are carried on a rail car than on a truck. The probability of an accident of any of the defined degrees of severity is shown to be about the same for rail or truck per vehicle mile.

The number of miles traveled by truck is greater than that by train in proportion to the number of drums carried by each. Therefore, the probability of a load of drums being involved in an accident is greater by truck than by rail but the larger number of drums in the rail car balances the difference in terms of probability of leakage of a drum of waste.

9 0 0 2 9 0 1 5 3

TABLE 5

PROBABILITY OF N OR MORE PERSONS RECEIVING A DOSE TO THE SKIN OF D MILLIREM OR MORE FROM THE RELEASE OF 1100 CURIES OF KRYPTON-85 IN AN ACCIDENT

Number of People N	Dose (millirem) D: 1	10	100	1000	5000
1	0.9	0.5	0.1	2×10^{-2}	3×10^{-3}
10	0.6	0.2	3×10^{-2}	1×10^{-3}	
10^2	0.2	4×10^{-2}	2×10^{-3}		
10^3	7×10^{-2}	2×10^{-3}			
10^4	1×10^{-2}				
10^5	5×10^{-4}				

* * * * *

TABLE 6

PROBABILITY OF N OR MORE PERSONS RECEIVING A DOSE TO THE THYROID OF D MILLIREM OR MORE FROM THE RELEASE OF 0.01 CURIES OF IODINE-131 IN AN ACCIDENT

Number of People	1	10	100	1000
1	0.5	9×10^{-2}	1×10^{-2}	2×10^{-4}
10	0.1	1×10^{-2}	4×10^{-4}	
10^2	2×10^{-2}	6×10^{-4}		
10^3	1×10^{-3}			

"BEST AVAILABLE COPY"

TABLE 7

PROBABILITY OF N OR MORE PERSONS RECEIVING A DOSE TO THE WHOLE BODY OF D MILLIREM OR MORE OVER A PERIOD OF ONE YEAR FOLLOWING THE RELEASE IN AN ACCIDENT OF 130 CURIES OF GROSS FISSION PRODUCTS WHICH DEPOSIT ON THE GROUND. 80% OF THE DOSE IS TO THE SKIN

Number of People N	Dose (millirem) D 1	10	100	1000	5000	10000
1	1	1	1	0.9	0.7	0.7
10	1	1	0.9	0.7	0.3	0.2
10^2	1	0.9	0.6	0.3	0.1	6×10^{-2}
10^3	1	0.7	0.4	9×10^{-2}	2×10^{-2}	6×10^{-3}
10^4	0.8	0.5	0.2	3×10^{-2}	9×10^{-4}	2×10^{-4}
10^5	0.7	0.4	8×10^{-2}	2×10^{-3}		

TABLE 8

PROBABILITY OF N OR MORE PERSONS RECEIVING A DOSE TO THE LUNGS OF D MILLIREM OR MORE FROM 1.3 CURIES OF GROSS FISSION PRODUCTS RELEASED IN AN ACCIDENT WHICH BECAME AIRBORNE

Number of People N	Dose (millirem) D 1	10	100	1000	5000	10000
1	1	0.8	0.3	5×10^{-2}	1×10^{-2}	4×10^{-3}
10	0.8	0.3	6×10^{-2}	4×10^{-3}	3×10^{-4}	4×10^{-5}
10^2	0.4	9×10^{-2}	6×10^{-3}	1×10^{-4}		
10^3	0.1	1×10^{-2}	2×10^{-4}			
10^4	4×10^{-2}	5×10^{-4}				
10^5	4×10^{-3}					

9 0 0 2 9 0 1 5 4

"BEST AVAILABLE COPY"

TABLE 9

Basic Estimates - Solid Radioactive Wastes

a. Soft solid wastes compacted in 55-gallon drums.

100 drums produced per 1100 MWe reactor year

1 curie of radioactivity per drum

2 truck shipments per year; 50 drums per truckload

1 rail car shipment per year; 100 drums per carload

1000 miles shipping distance from power plant to waste disposal site. If the waste burned in an open fire, it is unlikely that much of the activity would be widely dispersed. Most of the activity, perhaps as much as 99%, would remain in the ashes.

b. Resins, sludges, etc. dewatered and consolidated in 55-gallon drums.

3000 drums produced per 1100 MWe reactor year.

98% - Type A packages, limited to 20 curies/drum. About 3% low level compacted wastes and 95% average less than 0.3 curie per drum.

2% - Type B packages, 100 Ci maximum estimated activity per package; average estimated about 20 curies per drum.

60 truck shipments per year; 50 drums per truckload

20 rail car shipments per year; 150 drums per carload

500 miles shipping distance to waste disposal site.

Because of the form of the material, it is very unlikely that any significant amount of the activity in material burned in an open fire would be released, probably less than 10^{-5} of the activity in the contents.

Table 10 gives the estimated quantities of radioactive material which could be released in postulated accidents. The estimates are considered to be maximum values for the accident listed. Larger releases would be expected to have lower probabilities of occurring. The activity is expressed in curies of airborne fission products, although some other radioactive materials of lower degrees of toxicity would be present.

TABLE 10

ESTIMATED RELEASES FROM PACKAGES OF RADWASTE

Q - Activity in curies that become airborne

	Lid loose - one drum	Contents of 1 drum spilled out	Contents of 25 drums burned	25 drums broken open-severe impact
Compacted Waste	10^{-8}	10^{-6}	2.5×10^{-2}	2.5×10^{-5}
Type A Package	10^{-7}	10^{-6}	-	10^{-3}
Type B Package	10^{-6}	10^{-6}	-	0.25

90029 01555

"BEST AVAILABLE COPY"

APPENDIX B - SECTION II

POPULATION DOSE DISTRIBUTION PROBABILITIES

If radioactive material is released to the atmosphere in a short period of time at ground level and if it is assumed that there is no appreciable depletion of the airborne material, the dose caused by exposure to this material is

$$D = Q_0 K (X/Q) \qquad \text{(Rem)}$$

where Q_0 = curies released

K = dose coefficient $\frac{(\text{rem-m}^3)}{(\text{Ci-sec})}$ (These will be identified later)

Values of (X/Q) as a function of distance for ground level releases are given in Figure 1.

Values of isopleth areas A_{iW} (the area within which a particular dose D_i is equaled or exceeded) in square miles for selected values of the dose parameter $\frac{D_i}{Q_0 K} = \frac{(X)}{(Q)_i}$ are shown for Pasquill type weather conditions in Table 1 along with the weather probabilities and average wind speeds.

The number of people who receive a dose greater than D_i is proportional to the population density in the area involved. The probability of giving doses greater than D_i to N or more people is proportional to the probability of the release for a given weather condition being in an area with a population density m such that $m = N/A_{iW}$.

The fractional areas (F_m) with various population density ranges based on the populations within 50 miles of presently operating reactors calculated for the 1980 time period are given in Table 2. The table also gives the progressive summing of these fractions in two directions. This population distribution represents a relatively high average population density probably typical of the eastern United States. A distribution typical of the whole United States would be similar in shape but the fractional part with populations of 10,000 people or more per square mile would be about a factor of 10 less or about 0.001.

Given that a randomly located release has occurred, the probability of the release being in an area with less than m people per square mile is $\Sigma F(m)$. Conversely, the probability of the release being in an area with

more than m people per square mile is $1 - \Sigma F(m)$. The population is assumed to be uniformly distributed around the scene of an accident, with a density of m persons/mi^2. The probability of any particular value of m is the same as for a random point in Eastern United States as projected by the Staff for 1980, based on data of the U. S. Bureau of Census and the results of a study of the 1980 projection of the population density distributions within 50 miles of 22 operating reactors. The function of m used for subsequent calculations is P(>m), the probability that the population density exceeds m persons/mi^2. P(>m) is given in Table 2 and in Figure 2. If the probability of release in an area with more than m people per square mile is defined as Pm, then $Pm = P_R (1 - \Sigma F(m))$ where P_R is the total probability of release in the selected zone. The value of Pm/P_R vs. m is shown in Figure 2. The partial probability of giving more than N people (where $N = mA_{iW}$) doses greater than D_i for emission during a particular weather condition is given by

$$P_{NW} = P_W P_R \, [1 - \Sigma F(m)] \qquad \text{where } m = \frac{N}{A_{iW}}$$

The total probability is then

$$P_N = P_R \Sigma P_W \, [1 - \Sigma F(m)] \qquad \text{where } m = \frac{N}{A_{iw}}$$

The process of calculating the value of P_N/P_R is illustrated in Figure 3 for the case where $D_i/Q_0K \geq 10^{-4}$. The individual partial probabilities for each weather condition are shown along with the total. Total values of P_N/P_R for other values of the dose parameter are given in Figure 4.

Values for the dose coefficient K are given in Table 3.

Figure 5 is a plot of values of D/KQ versus P_N/P_R taken from Figure 4. Given Q (the curies released in an accident), P_R (the probability of a release of that number of curies or more), and K (the dose coefficient), the probability of N or more persons receiving a dose of D or more mrem from that release can be determined.

The probability of N or more persons receiving a dose of D or more millirem per reactor year from transportation accidents is the sum of the probabilities of N or more persons receiving that dose from each accident in the spectrum of credible accidents.

9 0 0 2 9 0 1 5 6

TABLE 1 PASQUILL WEATHER TYPE DOSE ISOPLETH AREAS (A_{iW}) FOR SELECTED VALUES OF THE DOSE PARAMETER D/Q_0K, ASSOCIATED WEATHER PROBABILITIES (P_W) AND AVERAGE WIND SPEEDS (U_W)

DOSE PARAMETER	AREAS IN SQUARE MILES						
	PASQUILL WEATHER TYPE						
D/Q_0K	A	B	C	D	E	F	G
10^{-1}	5.8×10^{-6}	5.8×10^{-6}	4.6×10^{-6}	3.8×10^{-6}	1.6×10^{-5}	3.8×10^{-5}	1.9×10^{-4}
10^{-2}	6.2×10^{-5}	6.2×10^{-5}	5.0×10^{-5}	4.2×10^{-5}	1.8×10^{-4}	5.8×10^{-4}	2.1×10^{-3}
10^{-3}	5.8×10^{-4}	5.4×10^{-4}	4.2×10^{-4}	4.2×10^{-4}	1.9×10^{-3}	5.4×10^{-3}	3.1×10^{-2}
10^{-4}	5.0×10^{-3}	5.4×10^{-3}	4.2×10^{-3}	5.8×10^{-3}	2.3×10^{-2}	7.3×10^{-2}	4.6×10^{-1}
10^{-5}	3.5×10^{-2}	4.6×10^{-2}	4.6×10^{-2}	7.7×10^{-2}	3.3×10^{-1}	1.5×10^{0}	1.9×10^{1}
10^{-6}	1.5×10^{-1}	3.1×10^{-1}	6.2×10^{-1}	1.2×10^{0}	7.7×10^{0}	7.7×10^{1}	3.9×10^{3}
P_W	.019	.081	.136	.44	.121	.122	.081
$\overline{U}_W$ $\left(\frac{m}{sec}\right)$							

"BEST AVAILABLE COPY"

TABLE 2 ESTIMATED POPULATION DISTRIBUTION FOR THE 1980 TO 2000 TIME PERIOD

ZONE LIMITS - m (People/mile^2)	P_m	ΣP_m	$1 - \Sigma P_m$
0		0	1.000
100	.255	.255	.745
1,000	.561	.816	.184
10,000	.174	.990	.010
>10,000	.010	1.000	0

"BEST AVAILABLE COPY"

The estimated doses from iodine-131 releases are based on uptake from inhalation of contaminated air. The potential exposure from deposition of iodine on grass and uptake through the milk chain would be significantly below the levels of direct exposure for the accidental releases considered.

TABLE 3 VALUES OF

DOSE COEFFICIENT K

Radionuclide	Dose	K $\frac{(rem\text{-}m^3)}{(Ci\text{-}sec)}$
I-131	Thyroid - child dose due to inhalation	4.76×10^2
	- adult dose due to inhalation	3.18×10^2
Kr-85	skin - due to submersion in the cloud	0.053
Gross fission products (33,000 MWD/MT burnup, 30 MW/MT power level, 150 days cooling)	Whole body-(80% of which is skin dose) due to material deposited on the ground assuming no depletion of cloud. Exposure during first year after release, assuming no loss from ground.	7.30×10^2
	Lung-due to inhalation	1.11×10^2

9 0 0 2 9 0 1 5 8

"BEST AVAILABLE COPY"

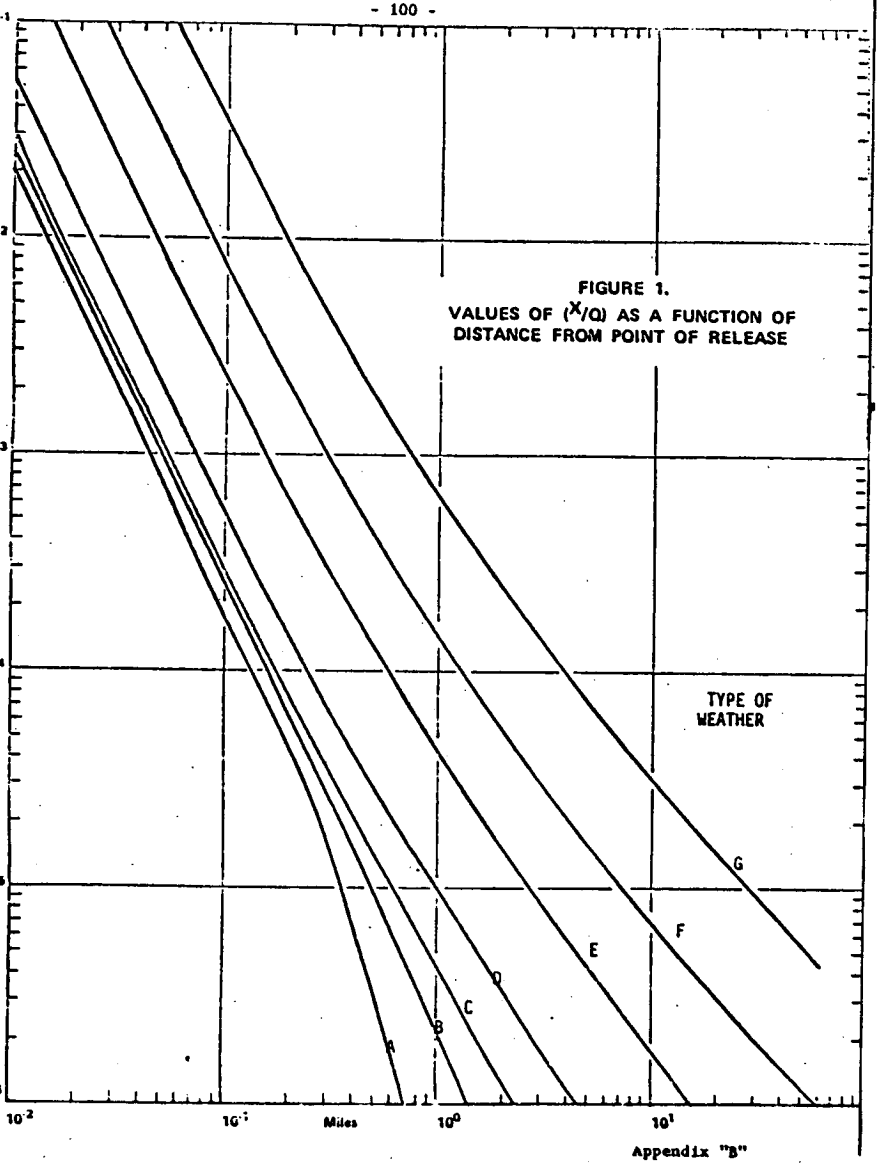

FIGURE 1.
VALUES OF (X/Q) AS A FUNCTION OF DISTANCE FROM POINT OF RELEASE

9 0 0 2 9 0 1 5 9

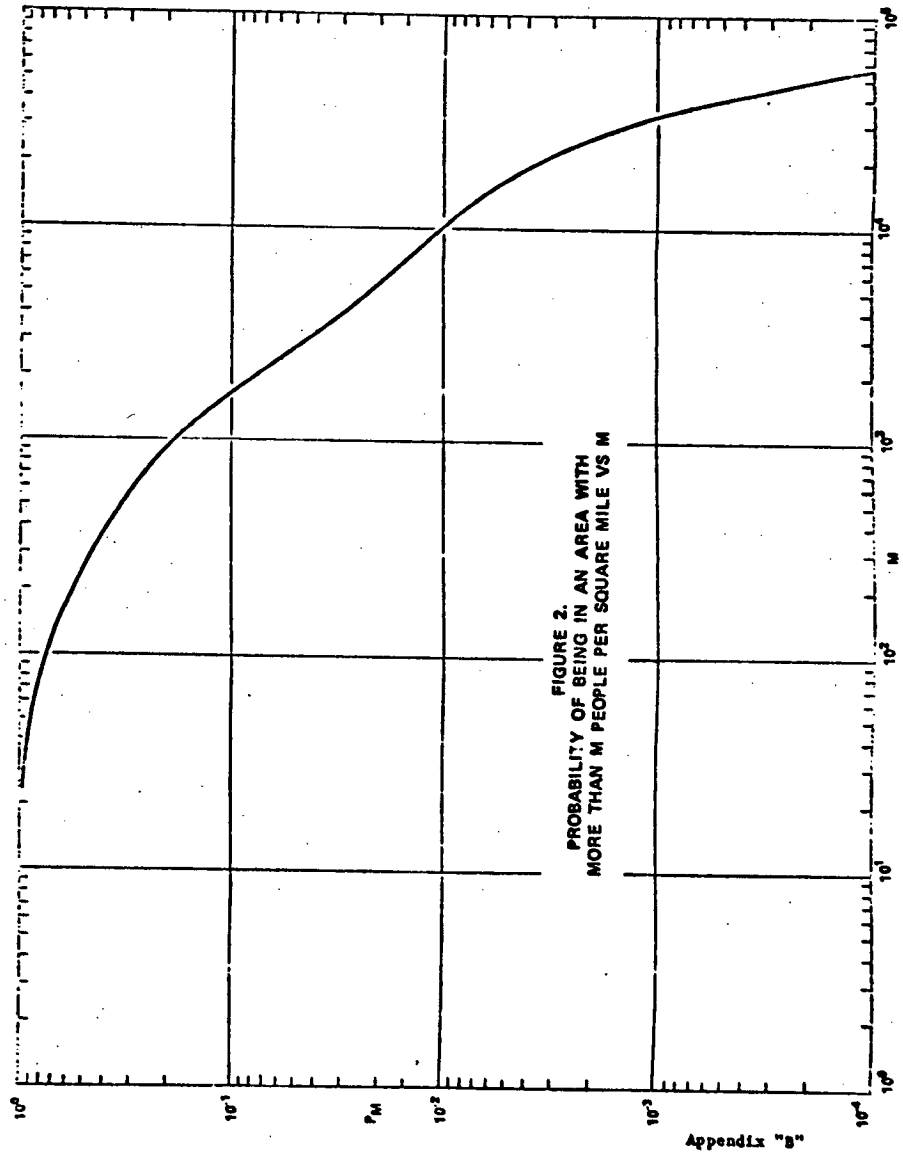

FIGURE 2.
PROBABILITY OF BEING IN AN AREA WITH MORE THAN M PEOPLE PER SQUARE MILE VS M

"BEST AVAILABLE COPY"

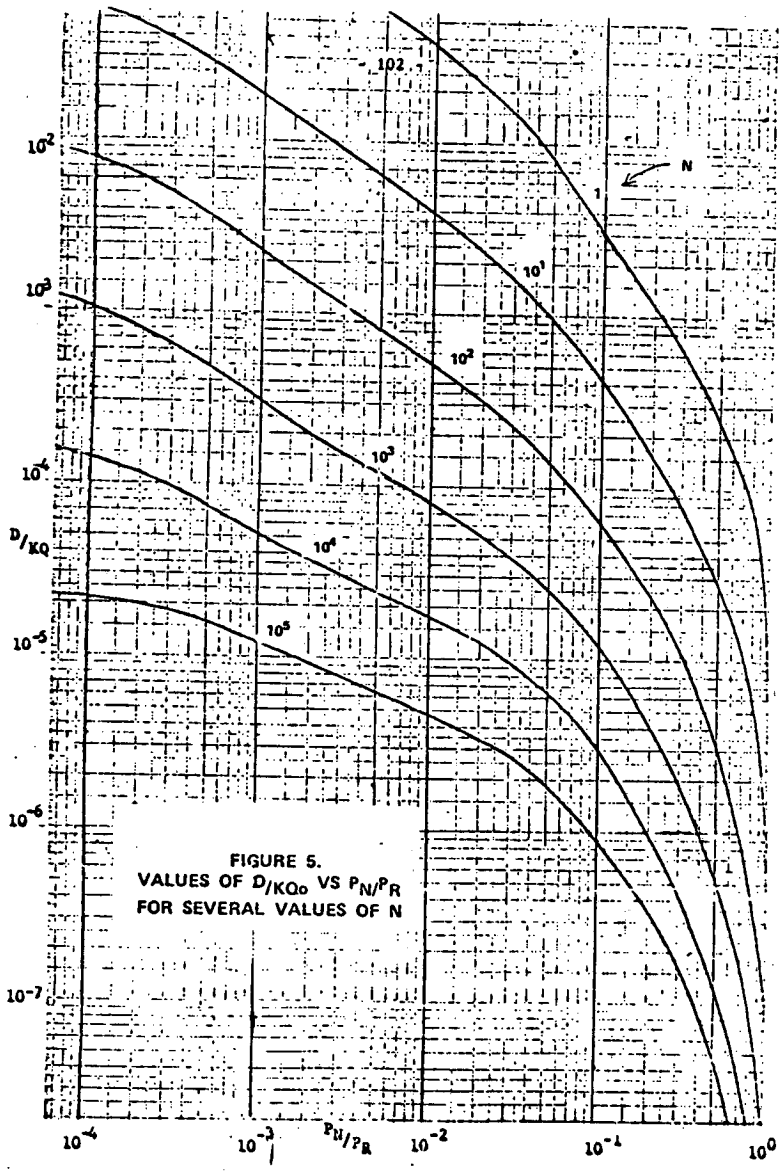

FIGURE 5.
VALUES OF $D/_{KQo}$ VS P_N/P_R
FOR SEVERAL VALUES OF N

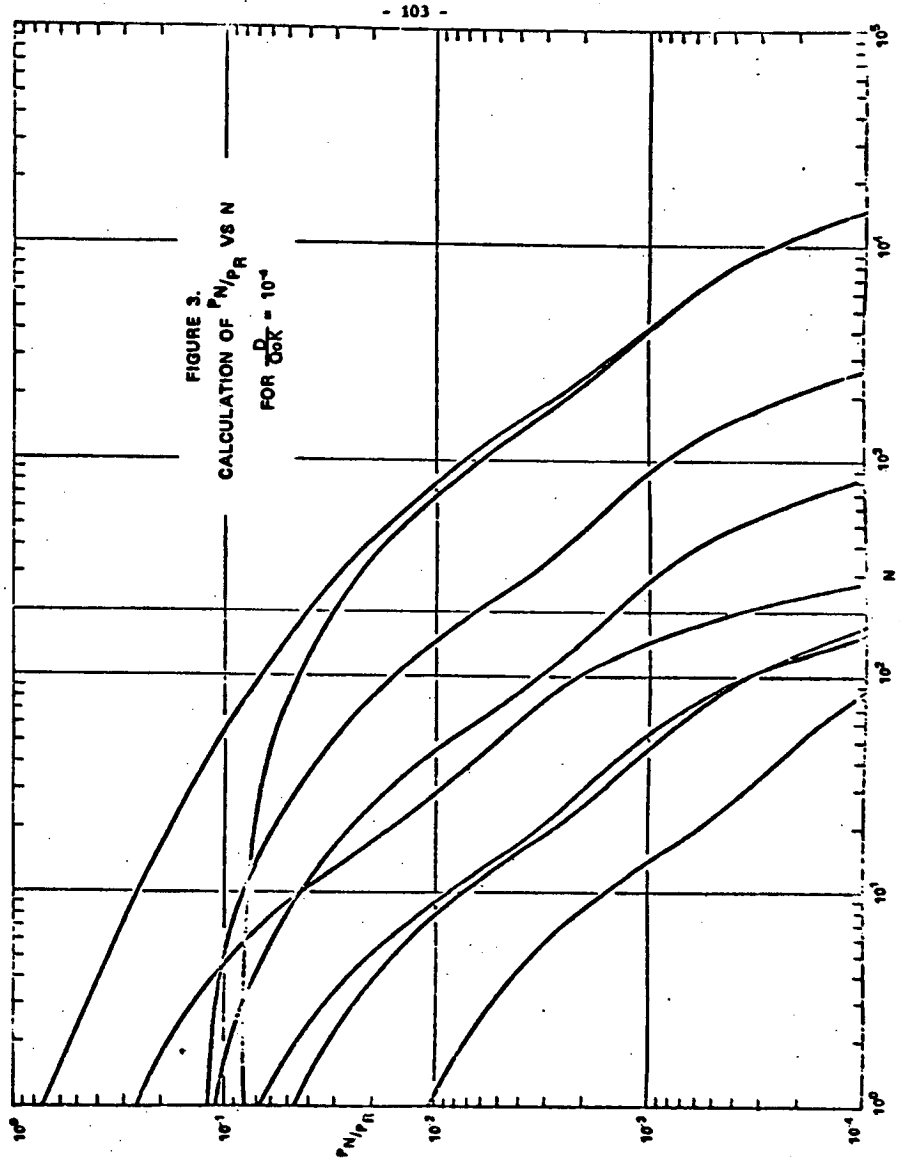

FIGURE 3.
CALCULATION OF P_N/P_R VS N
FOR $\frac{D}{QoK} = 10^{-4}$

9 0 0 2 9 0 1 6 0

"BEST AVAILABLE COPY"

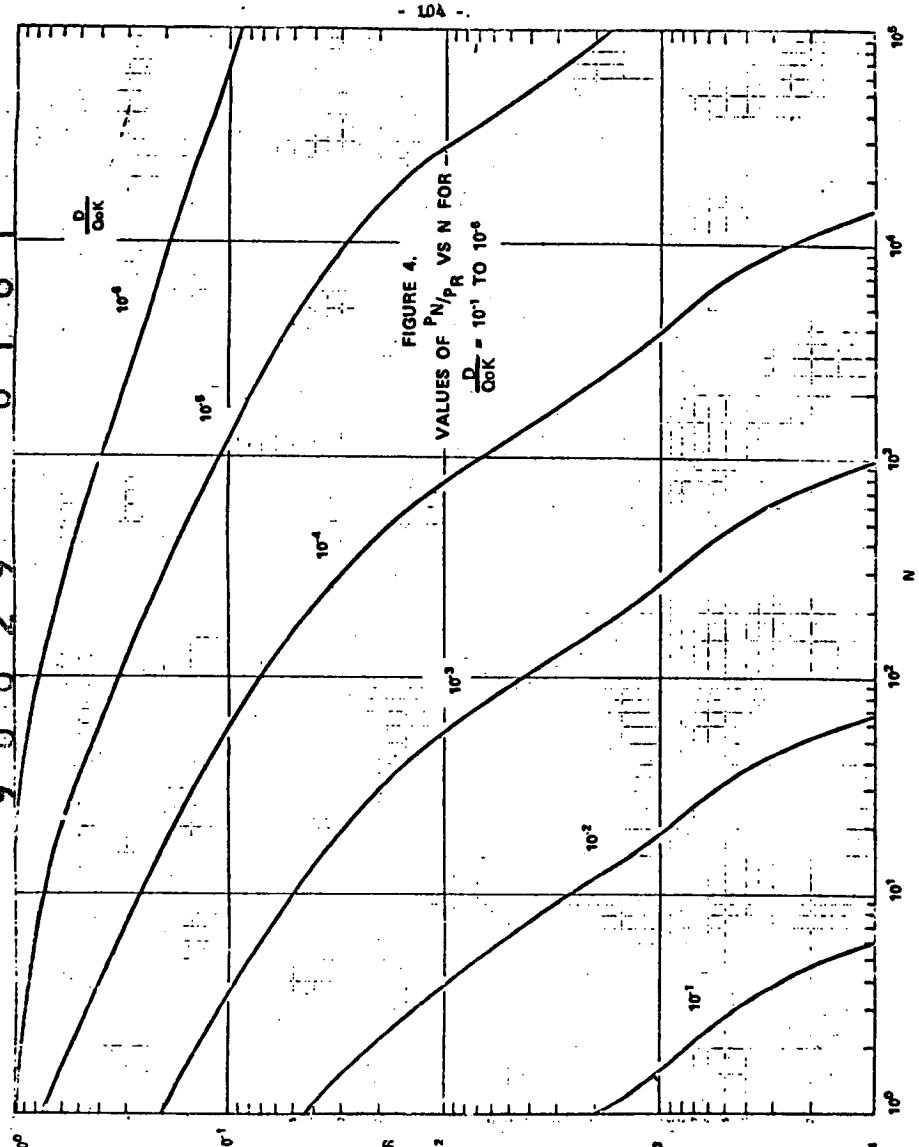

FIGURE 4. VALUES OF P_N/P_R VS N FOR $\frac{D}{C_0K} = 10^{-1}$ TO 10^{-6}

APPENDIX C

RISKS IN TRANSPORTATION ACCIDENTS FROM COMMON (NONRADIOLOGICAL) CAUSES

Injuries, Fatalities, and Property Damage

In most cases, when a shipment of unirradiated fuel, irradiated fuel, or solid wastes is involved in an accident, the effect on the environment from radiation will be very much less than that from common causes. Statistics supplied by DOT indicate that of the reportable truck accidents in 1969, 33% involved non-fatal injuries and 3.1% involved fatalities. Statistical data on accident probabilities, reportable accidents, and injuries and deaths from common causes are summarized below:

TABLE 1

ACCIDENT STATISTICS - COMMON CAUSES

Mode	Data Year	Probability (Accidents/vehicle-mile)	Injuries Per Accident	Fatalities Per Accident
Truck	1969	1.7×10^{-6}	0.51	0.03
Rail	1969	1.4×10^{-7}*	2.7	0.2
Barge	1970	1.5×10^{-6}	0.06	0.0

*Single rail car.

The following are estimates of the effects from common causes in the shipment of cold fuel to the plant and irradiated fuel and solid waste from the plant and return of both the cold fuel and irradiated fuel shipping containers. If all transport were by truck, the total number of truck miles would be about 155,000 per year. Based on the above data, it is estimated this would cause about 0.1 injuries and 0.01 fatalities per reactor year.

"BEST AVAILABLE COPY"

If the cold fuel is transported by truck and the irradiated fuel and solid waste by rail, the total truck miles would be about 12,000 and the total railroad car miles about 15,500 per year. It is estimated this would cause about 0.02 injuries and 0.001 fatalities per reactor year.

If the cold fuel and solid waste are transported by truck and the irradiated fuel by either rail or barge, the total truck miles would be about 35,000, and the total railroad car miles about 10,000 or the total barge miles about 5,000. In either case, it is estimated this would cause about 0.03 injuries and 0.003 fatalities per reactor year.

Also from the 1969 accident statistics for truck transport, about $72 million worth of property damage was reported in about 39,000 accidents or approximately $1800 per accident. The property damage for rail accidents is estimated to average $5800 per accident.[58] Similar data are not available for barge accidents.

The estimated impact on the environment from common causes in transportation associated with the reactor are summarized below:

TABLE 2

Mode of Transport	Environmental Impact for Common Causes - Per Reactor Year: Fatalities	Injuries	Property Damage
by truck	0.01	0.1	$475
by truck and rail	0.001	0.02	$ 50
by truck and rail or barge	0.003	0.03	$120

APPENDIX D

CALCULATIONS OF THE DOSE TO PEOPLE ALONG THE SHIPPING ROUTE UNDER NORMAL TRANSPORT CONDITIONS

Introduction

This is a description of the method used to calculate the dose to persons along the shipping route from a vehicle containing a shipment of radioactive material. The calculations show that the individual dose to any one person along the route is extremely small and, although large numbers of persons may be receiving this small dose, the cumulative dose to all the persons involved is also small.

The radioactive shipment on the vehicle is a point source for distances from the source of 100 feet or more. For this calculation, based on the regulatory limit of 10 mrem/hr at 6 feet from the surface of the vehicle, the maximum radiation level at 10 feet from the apparent center of the source was estimated to be 10 mrem/hr. The radiation dose to individuals at various distances from the passing source was calculated and summed to determine the total accumulated population dose.

1. The dose rate D at an exposure point from a radiation source can be approximated as follows:

$$D\ (\text{mrem/hr}) = \frac{K}{r^2}\ e^{-\mu r}\ B(r)$$

where K = constant dependent upon source strength (mrem-ft^2/hr)

r = distance between source and exposure point (ft)

$e^{-\mu r}$ = attentuation factor due to gamma interactions with air occurring between source and exposure point (μ = linear absorption coefficient [1.18×10^{-3} ft^{-1}])

B(r) = buildup factor to account for scattered components returning to exposure point

2. The buildup factor B(r) is difficult to calculate accurately (i.e., with an error less than ~5%) but can be reasonably approximated.[59] The attached graph shows buildup factors as a function of the atomic number Z of the absorbing medium and the distance between the source

90029 0162

"BEST AVAILABLE COPY"

and the exposure point for 4 MeV gamma rays. Using values from that graph and assuming B(r) is a linear function, the buildup factor was estimated as follows:

$\therefore$ $B(r) = mr + b$

at $r = 850$ feet; $B = 1.5$
$r = 1700$ feet; $B = 2.0$

$\rightarrow m = 6 \times 10^{-4}\ ft^{-1}$
$b = 1$

$B(r) = (6 \times 10^{-4})r + 1$

The average gamma ray energy for fission products is known to be about 1 MeV. However, the use of the easily available data for 4 MeV gamma rays will not result in an error which is large compared to the precision of the calculation.

3. The dose to an individual at an exposure point is determined by integrating the dose received by that individual as the radiation source passes his position.

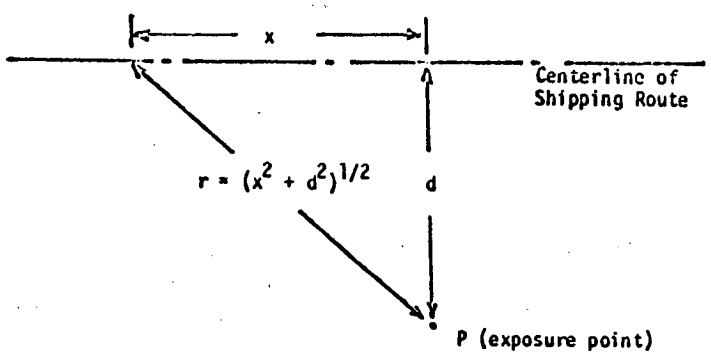

$\dot{D} = \frac{dD}{dt}$ $\qquad dD = \dot{D}dt$

x = distance along centerline of shipping route

v = velocity of vehicle = $\frac{dx}{dt}$

d = perpendicular distance from centerline of shipping route

$dD = \frac{1}{v}\dot{D}dx$

total dose $D = \int_{-\infty}^{\infty} \frac{1}{v}\dot{D}dx$
(mrem)

$$D = \frac{K}{v}\int_{-\infty}^{\infty} \frac{e^{-\mu r}}{r^2} B(r)dx$$

$$D(d) = \frac{K}{v}\int_{-\infty}^{\infty} \frac{e^{-\mu(x^2+d^2)^{1/2}}}{(x^2+d^2)} B([x^2+d^2]^{1/2})dx$$

Since the integrand is an even function,

$$D(d) = \frac{2K}{v}\int_{0}^{\infty} \frac{e^{-\mu(x^2+d^2)^{1/2}}}{(x^2+d^2)} B([x^2+d^2]^{1/2})dx$$

Since $r^2 = x^2 + d^2$

$2rdr = 2xdx$

and $dx = \frac{r}{x}dr = \frac{r}{(r^2-d^2)^{1/2}}dr$

$$D(d) = \frac{2K}{v}\int_{d}^{\infty} \frac{e^{-\mu r}}{r^2} B(r) \frac{r}{(r^2-d^2)^{1/2}}dr$$

$$= \frac{2K}{v}\int_{d}^{\infty} \frac{e^{-\mu r}}{r} \frac{B(r)}{(r^2-d^2)^{1/2}}dr$$

$$= \frac{2K}{v}\int_{d}^{\infty} \frac{(6 \times 10^{-4}r + 1)\, e^{-\mu r}}{r(r^2-d^2)^{1/2}}dr$$

90029 0163

"BEST AVAILABLE COPY"

4. In order to obtain a quantitative estimate of dose, the following assumptions were made:

(a) the source strength, K, is such that the exposure rate is 10 mrem/hr at 10 feet. That is: 10 mrem/hr = $K/10^2$ or

$K = 10^3$ mrem ft^2/hr.

(b) the vehicle travels 200 miles/day.

v (velocity) = 200 miles/day = 200 (5280)/24 (ft/hr)

$v = 4.4 \times 10^4$ ft/hr

Based on a uniform distance traveled each day and uniform distribution of persons along the route, the cumulative radiation dose to the population is the same whether the vehicle is moving all of the time at a constant rate of speed or standing still part of the day.

(c) there are no people closer than 100 feet. As calculated below, the dose to persons farther than 2600 feet from the vehicle is negligible.

(d) the population density is 330 people/$mile^2$ uniformly dispersed along the route.

Substituting, we have:

$$D(d) = 4.5 \times 10^{-2} \int_d^\infty \frac{[6 \times 10^{-4} r + 1]}{r} \frac{e^{-\mu r}}{[r^2 - d^2]^{1/2}} dr$$

D is the total dose (mrem) a person standing a distance d from the centerline of the shipping route would receive from the passing vehicle.

Integrating the above expression numerically yields the values given in Table I.

TABLE I

Distance from Centerline of Shipping Route (feet)	Individual Dose at Given Distance (mrem)
100	5.8×10^{-4}
200	2.5×10^{-4}
300	1.5×10^{-4}
400	1×10^{-4}
500	7.1×10^{-5}
700	4×10^{-5}
900	2.5×10^{-5}
1000	2×10^{-5}
1300	1.1×10^{-5}
1500	7.8×10^{-6}
1700	5.5×10^{-6}
2000	3.4×10^{-6}
2300	2.1×10^{-6}
2600	1.3×10^{-6}
Total	1.4×10^{-3}

Note:
Doses at some intermediate distances have been omitted to shorten the table.

90029 0164

"BEST AVAILABLE COPY"

5. In order to obtain the man-rem dose, it was assumed that on the average in each mile of the shipping route, a total of 165 people are uniformly distributed between 100 feet and 2600 feet on each side of the route. For ease of calculation, 1/26th of the 165 people are considered to be grouped at 100 feet intervals on each side of the route.

The total man-rem dose per vehicle mile to the persons on one side of the route is:

$$(165/26) \text{ people/mile } (5.8 \times 10^{-7} \text{ rem} + 2.5 \times 10^{-7} \text{ rem} + \ldots + 1.3 \times 10^{-9} \text{ rem})$$

$$= 6.35\ (1.42 \times 10^{-6}) \text{ man-rem/mile}$$

$$= 9.0 \times 10^{-6} \text{ man-rem/mile}$$

For both sides of the route, the cumulative dose is about 1.8×10^{-5} man-rem/mile.

For example, if the source travels 1000 miles, the total cumulative dose would be 2×10^{-2} man-rem. The total dose to the individual receiving the most exposure under the conditions assumed from a single shipment would be about 6×10^{-4} mrem.

The average population density in most cases is assumed to be 330 persons per square mile. This represents an area in which the population density is high, such as along the East Coast. For the area west of the Mississippi other than California, an average population density of 110 persons per square mile should be used as being more representative of that region. For shipment by barge, it is estimated that for the average barge route no persons reside within half a mile on either side of 2/3 of the route.

6. Conclusions

The cumulative dose to persons along the route of shipments of unirradiated and irradiated fuel and solid wastes, based on the shipment traveling 200 miles per day, estimated radiation levels in the vicinity of the transporting vehicle shown below and population densities discussed above, the population dose in man-rem for each mile over which unirradiated fuel, irradiated fuel or solid waste is shipped is given in Table II.

TABLE II

POPULATION DOSE PER MILE
SHIPMENT TRAVELS

Type of Shipment	Mode of Transport	Estimated[1] Radiation Level (mrem/hr)	Number[2] of Persons Exposed	Cumulative Population Dose per Mile (man-rem)
Unirradiated nuclear fuel	Truck	0.1	300	1.8×10^{-7}
Irradiated fuel	Truck	10	300	1.8×10^{-5}
	Rail		300	1.8×10^{-5}
	Barge		100	6×10^{-6}
Solid radioactive waste	Truck	10	300	1.8×10^{-5}
	Rail		300	1.8×10^{-5}

(1) Radiation level estimated at 10 feet from apparent center of source.

(2) Average number of persons within 1/2 mile of centerline of route.

90029 0165

"BEST AVAILABLE COPY"

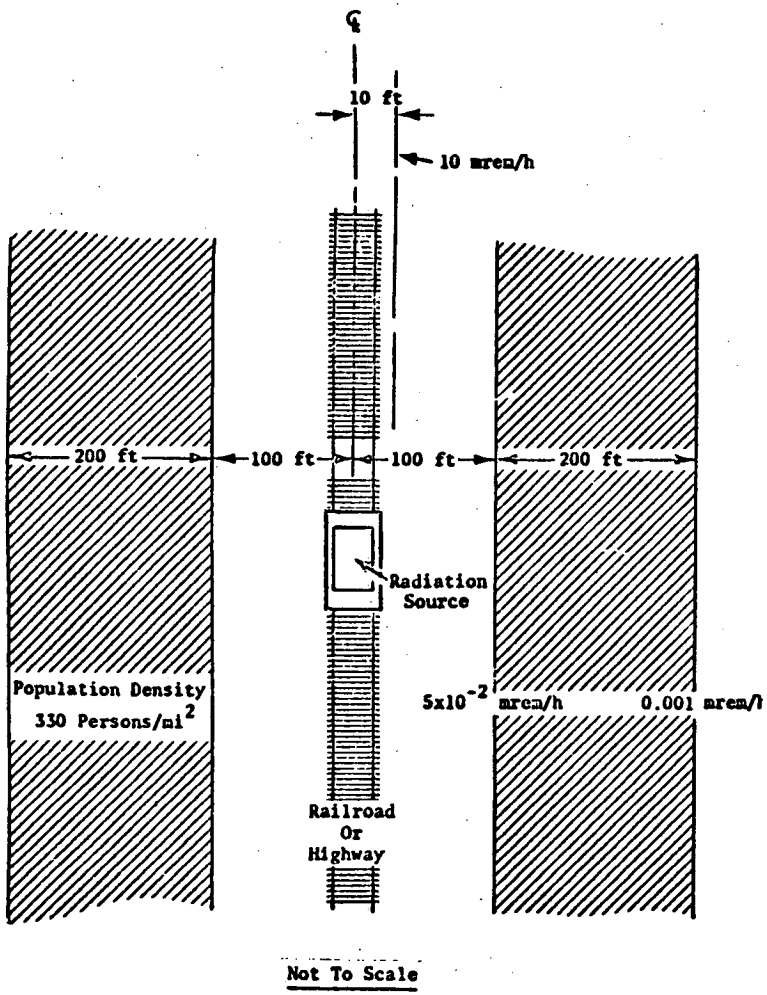

FIGURE 1. POPULATION DISTRIBUTION ALONG SHIPPING ROUTE

BUILDUP-FACTOR CORRECTIONS

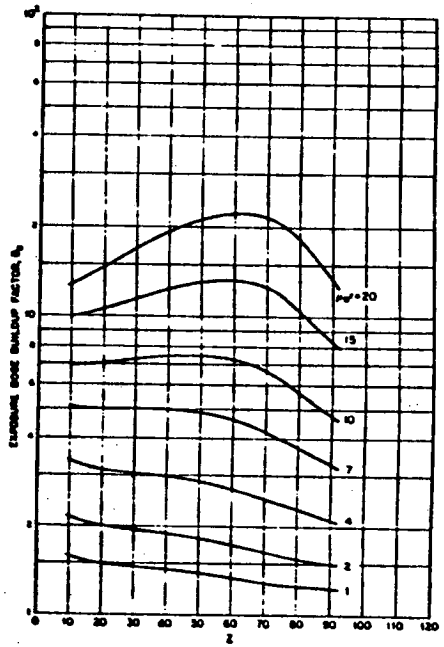

Fig. 5.45—Exposure-dose buildup factor as a function of atomic number Z, for a 4-MeV point isotropic source. (From H. Goldstein, *Fundamental Aspects of Reactor Shielding*, Addison-Wesley Publishing Co., Reading, Mass., 1959.)

"Mathematical Theory of Radiation Dosimetry", Fitzgerald, Brownell, and Mahoney, 1967

"BEST AVAILABLE COPY"

REFERENCES

1. 10 CFR Part 71.
2. 49 CFR Parts 170 thru 179, for classification, packaging, labeling, and carriage by rail or truck; 14 CFR Part 103 for carriage by air; 46 CFR Part 146 for carriage by water.
3. 39 CFR Parts 124 and 125.
4. 36 F.R. 22181; AEC Notice of Proposed Rule Making, 10 CFR 71; DOT Docket No. HM-73.
5. 10 CFR Part 71, §§ 71.51 through 71.54; conditions imposed in AEC specific licenses; and 49 CFR Parts 171, 173, and 178.
6. 49 CFR § 173.393(i) and (j).
7. For motor vehicles, 49 CFR § 177.842(b); for railroad cars, 49 §§ 174.586(h)(2) and 175.655(j)(2); for air craft, 14 CFR § 103.23(c); and for ships, 46 CFR § 146.19-35.
8. 49 CFR § 173.393(h).
9. 49 CFR § 173.393(e).
10. 49 CFR §§ 173.399 and 173.402(a)(8).
11. 49 CFR §§ 174.54 and 177.823.
12. 49 CFR §§ 171.15, 174.566, and 177.861.
13. 49 CFR §§ 173.427 and 173.430.
14. DOT Docket No. Hm-98; Amdt. No. 173-66; 37 F.R. 17969, September 2, 1972.
15. "Fuel Rod Drop Test": JN-55, Estey and Nechodon, October 1971, Jersey Nuclear Company.
16. "Siting of Fuel Reprocessing Plants and Waste Management Facilities," ORNL-4451, July 1970.

90029 01967

17. "Transportation of Nuclear Fuel Material in the United States," Report by the Nuclear Assurance Corporation, 24 Executive Park West, Atlanta, Georgia, 1970.
18. 10 CFR § 71.35(a)(4).
19. "A Spent-Fuel Receiver's Point of View and Experience," R. F. Rogers, CONF-6810-1001, October 14-18, 1968.
20. "Calculated Fuel Rod Perforation Temperatures - Commercial Power Reactor Fuels," C. W. Smith, NEDO-10093, September 1969.
21. CRRP - 1124
    D. G. Burst
    "Diffusion of Fission Gas, Calculated Diffusion from a Sphere Taking into Account Trapping and Return from the Traps"
    Nov. 15, 1962
22. GA - 10073
    F. E. Vanslager, W. E. Bell, O. Sisman and M. T. Morgan
    "Fission Product Transport in HTGR Systems - A Summary"
    April 22, 1970
23. ORNL - 3981
    G. W. Parker, G. E. Creek, C. J. Barton, W. J. Marten, R. A. Lorenz
    "Out-of-Pile Studies of Fission Product Release from Overheated Reactor Fuels at ORNL, 1955-1965"
    July 1967
24. BMI - 1913
    R. L. Ritzman and David L. Morrison
    "FRCRL2 - A Computer Code for Calculating Fission Product Release in Reactor Accident Analysis"
    August 1971
25. BMI - 1179
    D. L. Morrison, J. M. Genco, J. A. Gieseke, R. L. Ritzman, C. T. Walters and D. N. Sunderman
    "An Evaluation of the Applicability of Existing Data to the Analytical Description of a Nuclear Reactor Accident"
    August 12, 1966
26. CRDC - 721
    A. H. Booth
    "A Method of Calculating Fission Gas Diffusion from UO_2 Fuel and Its Application to the X-2-f Loop Test"
    September 1957

"BEST AVAILABLE COPY"

27. ANCR - 1010
V. F. Baston, J. H. McFadden and W. A. Yuill
"An Analytical Method for Calculating Steady State Fission Gas Release - Fission Product Fuel Model (FPFM) Code"
September 1971

28. GEAP - 12205
L. N. Grossman and J. O. Hegland
"Tritium Distribution in High Power Zircaloy Fuel Elements"
June 1971

29. GEAP - 5642
T. C. Rowland
"UO_2 Irradiation for ORNL Final Report"
June 1968

30. NEDO - 10173
H. E. Williamson and D. C. Ditmore
"Current State of Knowledge High Performance Zircaloy - Clad UO_2 Fuel"
May 1970

31. WCAP - 7828
D. D. Malinowski, M. J. Bell, E. R. Duhn, and J. Locante
"Radiological Consequences of a Fuel Handling Accident"
December 1971

32. G. Burley
"Evaluation of Fission Product Release and Transport for a Fuel Handling Accident"
September 24, 1971

33. "Processing and Packaging of Solid Waste from BWR's," Loy and Saxena, August 1971, CONF-710801.

34. AEC-DOT-PHS Joint Transportation Study - Reported at the Third International Symposium on Packaging and Transportation of Radioactive Material, Hanford, Washington, August 1971, CONF-710801.

35. "Highway Vehicle Impact Studies: Tests, Methodical Analysis of Vehicle, Package, and Tie Down Systems, Capable of Carrying Radioactive Material," ORNL-NSIC-51, Kelly and Stoddart, February 1970.

36. Federal Highway Administration, "1969 Accidents of Large Motor Carriers of Property," December 1970. This covers interstate motor carriers of property having annual operating revenues of $300,000 or more.

37. "The AEC Accident Record and Recent Changes in AEC Manual Chapter 0529," W. C. McCluggage, CONF-710801, August 1971.

38. "Third Party Liability Insurance and Government Indemnity Associated with the Transportation of Radioactive Material," L. G. Cummings, CONF-710801, August 1971.

39. 49 CFR § 397.1(d).

40. "Today's Role of DOT in Regulating the Transport of Radioactive Material," A. G. Grella, CONF-710801, August 1971.

41. OHM Newsletter, Vol. II, No. 8, Published by the Department of Transportation, February 1972.

42. "The Release of Radioactive Material in the Event of the Destruction of a Full Type A Package," Jonasson et al, CONF-681001, October 1968.

43. "Special Tests for Plutonium Shipping Containers - 6m, SP5795, and L-10," L. F. Stravasnik, SC-DR-72 0597, September 1972.

44. Federal Railroad Administration Accident Bulletin No. 138, "Summary and Analysis of Accidents on Railroads in the U.S.," 1969.

45. U.S. Coast Guard, "Statistical Summary of Casualties to Commercial Vessels," December 1970.

46. "Trucking of Radioactive Materials: Trucking vs. Economy in Highway Transport," Leimkuhler, NYO-9773, Johns Hopkins Press, 1963.

47. Federal Highway Administration, "1969 Analysis of Accident Reports Involving Fires," December 1970.

48. "Strength Tests of Prototype Sea Disposal Containers for Radioactive Wastes," Southwest Research Institute, TID-13942, October 20, 1961.

49. "Study of Design Requirements for Sea Disposal Containers," Southwest Research Institute, TID-15431, April 6, 1962.

9 0 0 2 9 0 1 6 8

"BEST AVAILABLE COPY"

50. "Sea Disposal Container Test and Evaluation," Pneumodynamics Corporation, TID-13226, June 15, 1961.

51. "The Transport of Radioactive Materials. Interim Recommendations for the Application of Environmental Tests to the Approval of Packaging," Messenger and Fairbairn, AHSB-S-R-19, 1963.

52. Examination of the International Atomic Energy Agency's Regulations for the Safe Transport of Radioactive Materials EUR 3485 e,f Vol. I "Technical Packaging requirements; An analysis of the criteria and tests, together with a study of practical means of compliance," Final Report, 1968.

53. 49 CFR § 173.398; 10 CFR § 71.36.

54. "The Safe Transport of Radioactive Materials," R. Gibson, 1966.

55. AEC Docket 70-1220, GE application for license amendment.

56. Federal Radiation Council Report No. 7, "Background Material for the Development of Radiation Protection Standards; Protective Action Guides for Strontium 89, Strontium 90, and Cesium 137," May 1965.

57. Based on analysis developed by AEC Directorate of Licensing of cask design submitted by General Electric, Docket No. 70-1220, 1972.

58. Based on data taken from "Rail Accident Statistics Pertinent to the Shipment of Radioactive Materials," K. B. Stewart, HW-76299, January 21, 1963.

59. "Mathematical Theory of Radiation Dosimetry," Fitzgerald, Brownell, and Mahoney, 1967.

60. "The Probability of Transportation Accidents," William A. Brobst, 14th Annual Explosives Safety Seminar, New Orleans, Louisiana, November 10, 1972.

9 0 0 2 9 0 1 6 9

END

DATE FILMED

4 / 12 / 73